Electronic Signature Information

Name	DOC0702714
Revision	1
Type	Controlled Document
Title	Minimum Svc Area - Scan Room
Originator	208015558_kenneth_k_hietala

Name	Reason For Change	File Size (Bytes)
Test Summary - LCC Magnet Minimum Service Area.pdf	Scan Room Minimum Service Area	266526

Route	Signer	Status	Comments	Completion Date
R-4045001	212008782_michael_j_radziun	Approve	Approve	17 Dec 2009 16:55:12 GMT
R-4045001	212013458_jeffrey_f_schwab	Approve	approve as shown.	17 Dec 2009 15:53:47 GMT
R-4045001	208015558_kenneth_k_hietala	Approve	approved	17 Dec 2009 15:27:31 GMT

* Printed versions are For Reference Only *

Approved

1.5T & 3T LCC Based Minimum Service Area – Floor

Problem Statement:

Site Planning struggles with site plans arriving into the Design Center failing to meet the published minimum service room size.

- 5 or more Site Deviations required MR Engineering attention – each site deemed an EHS egress issue
- MR Engineering could not defend the room dimensions – EHS over ruled the space requirements

Resolution Plan:

Define all MR Service Methods within the scan room. Measure and define the minimum space required to perform the function. Refer to the following page for the detailed list of methods tested.

NOTE: Rows highlighted in YELLOW are owned by MR Service Engineering. Remaining tasks are Magnet Plant Service Methods. Magnet Plant methods were not included in this test plan.

Conclusion:

Minimum Service area published in all LCC based product Pre-Installation Manauls including HD and HDx product Pre-Installation Manuals are under-sized.

- area behind magnet will prevent
  - removal and installation of the rear pedestal (3 FEs required)
  - trouble shooting of RF connectors
  - service methods of patient table long drive (replacement, initial alignment, etc)
  - Body Hybrid removal/insertion
- area to the non cold head side of magnet needs to grow
  - insufficient room to work on enclosures
  - PAC/SRI sled requires additional space
- Front of Magnet – corners removable provides Service doors and patient viewing window requirements are balanced

Next Step:

- receive MR Team consensus on the new room dimensions
- modify PIM to reflect new room size
- Design Center to develop process to deal with site to site variations / balance of ALL Magnet Room requirements

Approved

1.5T & 3T LCC Based Minimum Service Area – Test Matrix

Minimum Service Area Requirements							Minimum Service Area Matrix					Test Rational
Task	Owner	Tool P/N	Width	Depth	Height	NOTES	HD Enclsoure			HDx Enclosure		
			All Dimensions From Iso-center of Magnet - unless noted				.15T BRM	1.5T TRM	3T LCC	1.5T	3T	
Cold Head Removal Tool	Magnet Plant											
Magnet Service Platform set-up	MR		27	109	FE Height				X		X	3T has tightest service area - platform either fits or is does not
Vent inspection	Magnet Plant											
Burst Disk Servicing	Magnet Plant											
Shim Lead & Baffle replacement	Magnet Plant											
Sav-Con connector replacement	Magnet Plant											
Instrumentation lead assembly replacement.	Magnet Plant											
Magnet Ramp Leads/Supply	Magnet Plant											
Magnet plotting fixture installation	Magnet Plant											
Magnet Shim - includes leads/supply	Magnet Plant											
Magnet De-ice	Magnet Plant											
Magnet Vacuum Port Access	Magnet Plant											
Magnet Cryostat warm-up	Magnet Plant											
Gradient Coil Replacement	MR		128	131	FE Height		X		X			1 - 1.5T and 1 - 3T need to be tested. Either enclosure set is acceptable as the covers are removed before cart is moved into scan room
Body Coil Replacement	MR		80	80	FE Height		X		X			1.5T RF Tube is different then TRM based product. The HD or HDx RF Tubes are equivalent dimensionally so we can test either HD or HDx.
RF Shield Replacement	MR		80	80	FE Height		X		X			1.5T RF Tube is different then TRM based product. The HD or HDx RF Tubes are equivalent dimensionally so we can test either HD or HDx.
Dock Removal/Repair	MR		80	45	FE Height		X		X			Dock is critical to field strenght, not to enclsoure types.
Front Endbell removal	MR		27	80	FE Height		X		X			1.5T HD is the larger end bell. The 3T or TRM HD/HDx are equivalent dimensionally.
Rear Endbell removal	MR		27	80	FE Height		X		X			1.5T HD is the larger end bell. The 3T or TRM HD/HDx are equivalent dimensionally.
Magnet cover's removal	MR		24	80	FE Height		X		X		X	HD covers are different then HDx. 1.5T and 3T have different side dimensions.
Blower Removal	MR		27	see path	FE Height		X		X			Blower Box is dependent upon the field strengths. HD has a tigher Minimum Srvice Area. No need to repeat the same procedure on HDx.
Bridge removal	MR		80	70	FE Height		X		X			1.5T and 3T HD and HDx are equivalent dimensionally.
Gradient Filter Replacement	MR		27	see path	FE Height		X		X			Field strength is critical, not enclosure dimensions. Testing 1 - 1.5T and 1 - 3T is required; not the enclosure type.
LPCA replacements	MR		63	60	FE Height				X		X	
PAC/SRI replacement	MR		23	60	FE Height				X		X	remove/service in tightest allowable space - 3T HD and HDx
Rear Pedestal component replacements	MR		63	60	FE Height						X	Field strength is critical, not enclosure dimensions. Testing 1 - 3T is required; not the enclosure type.

Approved

3T LCC TRM Minimum Service Area – Floor / Ceiling

Scan Room Service Areas

Rear Pedestal Area

Rear Pedestal Alignment, Cable

RF Cable Repair

Gradient leads routing, connector routing

Long Drive, RF connections, Hybrid splitter

Blower Box Removal

Front end bell, rear End bell, table dock, etc

Gradient Filter replacement

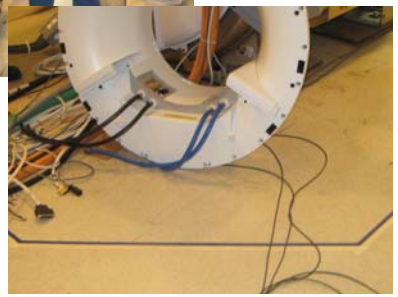

Split Bridge

imagination at work

Approved

Room Shape to Meet Service Methods

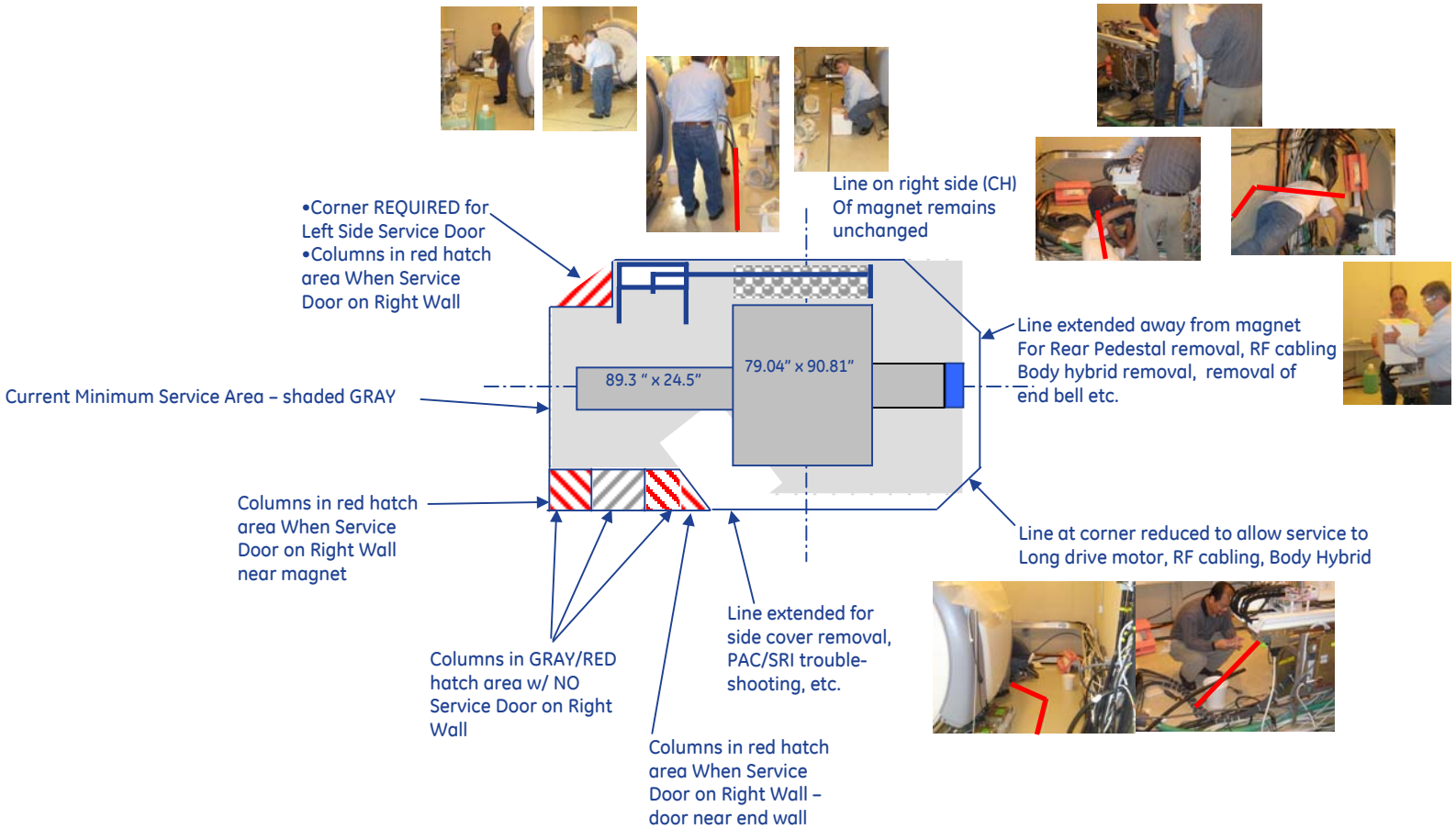

NOTE: Other Pre Installation planning requirements, not defined within this slide, must also be met. Moving metal, structural steel, gauss field containment, Cryogenic Venting, Patient scan viewing, coil/SPT phantom storage, etc define a subset of the PIM requirements.

Approved

New Minimum Service Area Room Dimensions
1.5T and 3T LCC Based Products

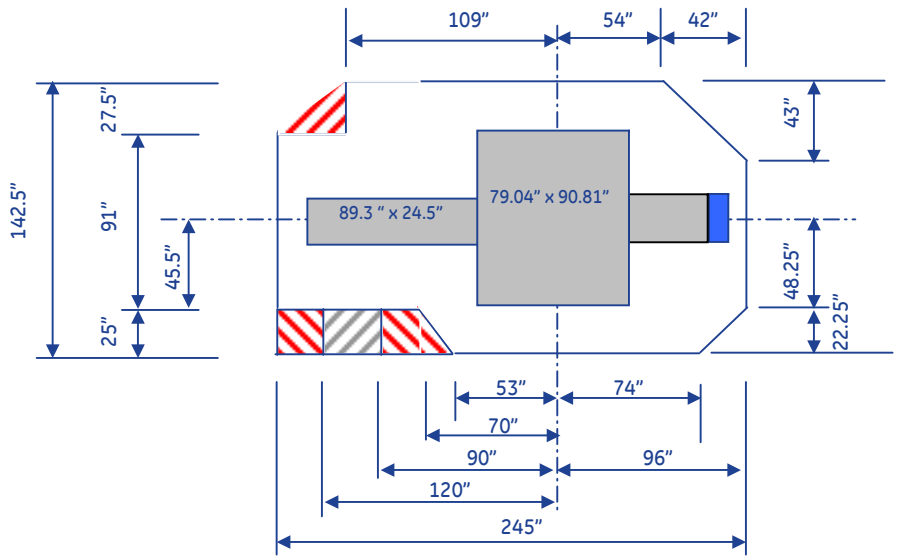

Approved

1.5T & 3T LCC Minimum Service Area – Floor / Ceiling

Long Gradient Cart – Room Turning Radius

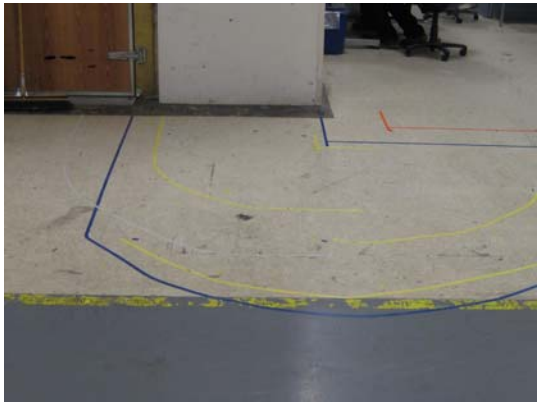

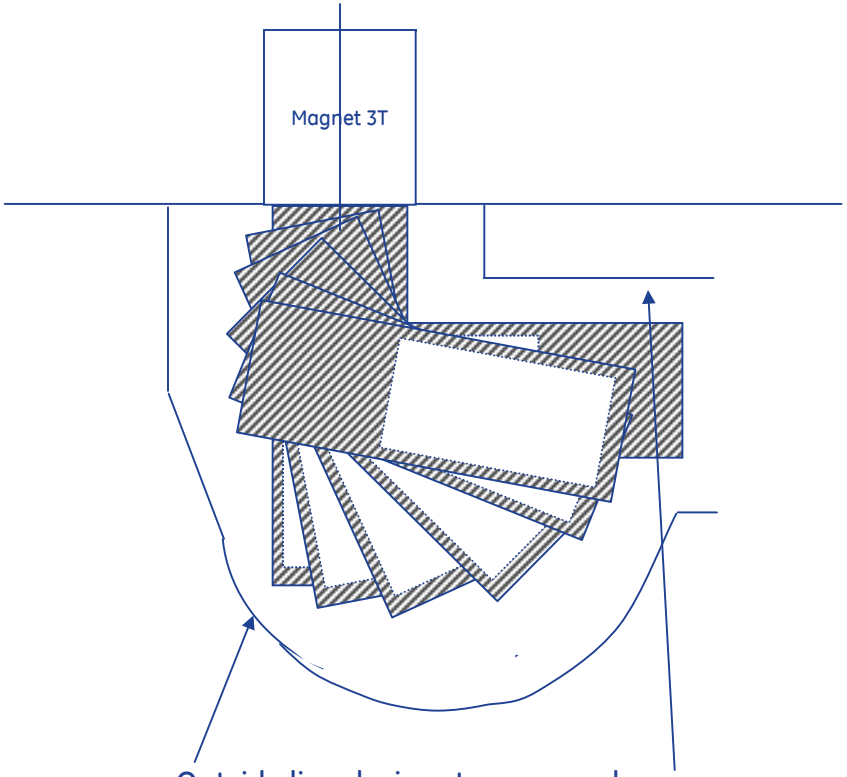

Outside line designates areas where normal sized Field Engineer would require Physical floor space.

Approved

Long Gradient Coil Cart

Turning Radius

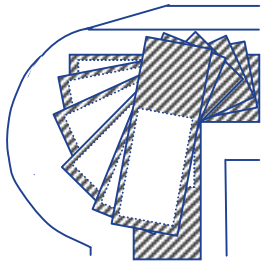

Long Gradient Coil Cart Travel Path
Tightest Turning Radius

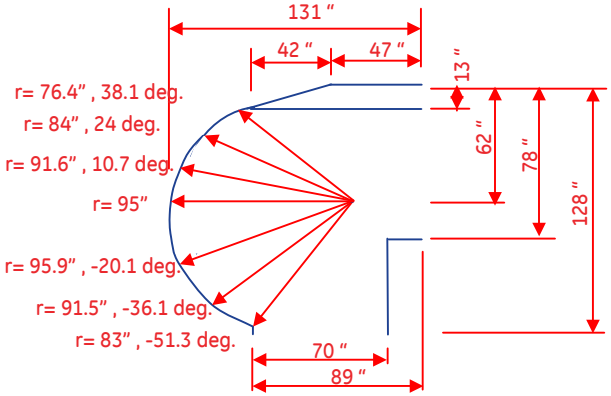

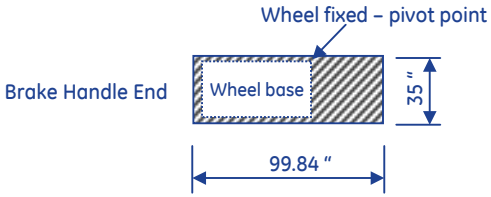

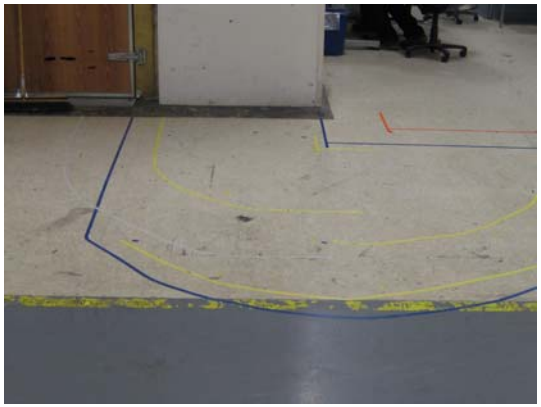

Approved

Magnet Plant Minimum Ceiling Height Requirement

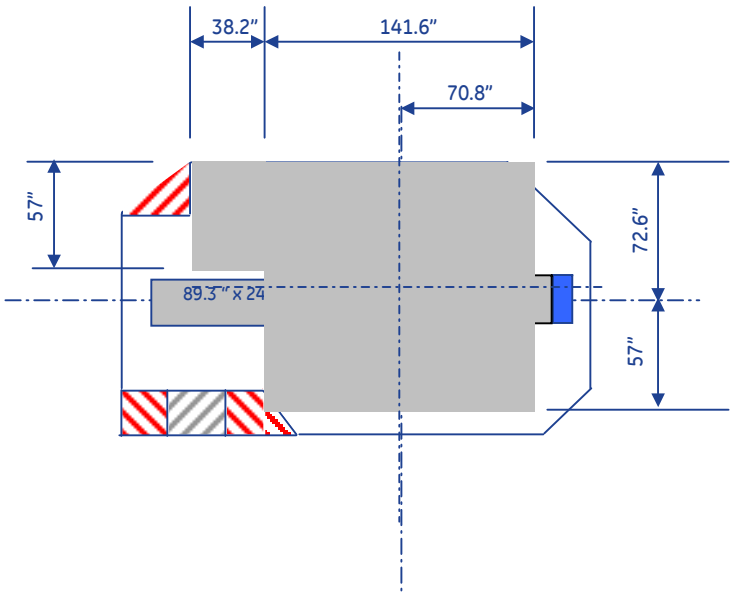

Approved