GE Healthcare

Optima XR640
Pre-Installation

OPERATING DOCUMENTATION

5308127-1EN
Revision 6

ATTENTION

LES APPAREILS A RAYONS X SONT DANGEREUX A LA FOIS POUR LE PATIENT ET POUR LE MANIPULATEUR SI LES MESURES DE PROTECTION NE SONT PAS STRICTEMENT APPLIQUEES

Bien que cet appareil soit construit selon les normes de sécurité les plus sévères, la source de rayonnement X représente un danger lorsque le manipulateur est non qualifié ou non averti.
Une exposition excessive au rayonnement X entraîne des dommages à l'organisme.
Par conséquent, toutes les précautions doivent être prises pour éviter que les personnes non autorisées ou non qualifiées utilisent cet appareil créant ainsi un danger pour les autres et pour elles-mêmes.
Avant chaque manipulation, les personnes qualifiées et autorisées à se servir de cet appareil doivent se renseigner sur les mesures de protection établies par la Commission Internationale de la Protection Radiologique, Annales 26 : Recommandations de la Commission Internationale sur la Protection Radiologique et les normes nationales en vigueur.

WARNING

X-RAY EQUIPMENT IS DANGEROUS TO BOTH PATIENT AND OPERATOR UNLESS MEASURES OF PROTECTION ARE STRICTLY OBSERVED

Though this equipment is built to the highest standards of electrical and mechanical safety, the useful x-ray beam becomes a source of danger in the hands of the unauthorized or unqualified operator.
Excessive exposure to x-radiation causes damage to human tissue.
Therefore, adequate precautions must be taken to prevent unauthorized or unqualified persons from operating this equipment or exposing themselves or others to its radiation.
Before operation, persons qualified and authorized to operate this equipment should be familiar with the Recommendations of the International Commission on Radiological Protection, contained in Annals Number 26 of the ICRP, and with applicable national standards.

ATENCION

LOS APARATOS DE RAYOS X SON PELIGROSOS PARA EL PACIENTE Y EL MANIPULADOR CUANDO LAS NORMAS DE PROTECCION NO ESTAN OBSERVADAS

Aunque este aparato está construido según las normas de seguridad más estrictas, la radiación X constituye un peligro al ser manipulado por personas no autorizadas o incompetentes. Una exposición excesiva a la radiación X puede causar daños al organismo.
Por consiguiente, se deberán tomar todas las precauciones necesarias para evitar que las personas incompetentes o no autorizadas utilicen este aparato, lo que sería un peligro para los demás y para sí mismas.
Antes de efectuar las manipulaciones, las personas habilitadas y competentes en el uso de este aparato, deberán informarse sobre las normas de protección fijadas por la Comisión Internacional de la Protección Radiológica, Anales No 26: Recomendaciónes de la Comisión Internacional sobre la Protección Radiológica y normas nacionales.

ACHTUNG

RÖNTGENAPPARATE SIND EINE GEFAHR FÜR PATIENTEN SOWIE BEDIENUNGSPERSONAL, WENN DIE GELTENDEN SICHERHEITSVORKEHRUNGEN NICHT GENAU BEACHTET WERDEN

Dieser Apparat entspricht in seiner Bauweise strengsten elektrischen und mechanischen Sichereitsnormen, doch in den Händen unbefugter oder unqualifizierter Personen wird er zu einer Gefahrenquelle.
Übermäßige Röntgenbestrahlung ist für den menschlichen Organismus schädlich.
Deswegen sind hinreichende Vorsichtsmaßnahmen erforderlich, um zu verhindern, daßunbefugte oder unqualifizierte Personen solche Geräte bedienen oder sich selbst und andere Personen deren Bestrahlung aussetzen können.
Vor Inbetriebnahme dieses Apparats sollte sich das qualifizierte und befugte Bedienungspersonal mit den geltenden Kriterien für den gefahrlosen Strahleneinsatz durch sorgfältiges Studium des Hefts Nr. 26 der Internationalen Kommission für Strahlenschutz (ICRP) vertraut machen: Empfehlungen der Internationalen Kommission für Strahlenschutz und anderer nationaler Normenbehörden.

Important Information

LANGUAGE

ПРЕДУПРЕЖДЕНИЕ (BG)

Това упътване за работа е налично само на английски език.

- Ако доставчикът на услугата на клиента изиска друг език, задължение на клиента е да осигури превод.
- Не използвайте оборудването, преди да сте се консултирали и разбрали упътването за работа.
- Неспазването на това предупреждение може да доведе до нараняване на доставчика на услугата, оператора или пациента в резултат на токов удар, механична или друга опасност.

警告 (ZH-CN)

本维修手册仅提供英文版本。

- 如果客户的维修服务人员需要非英文版本，则客户需自行提供翻译服务。
- 未详细阅读和完全理解本维修手册之前，不得进行维修。
- 忽略本警告可能对维修服务人员、操作人员或患者造成电击、机械伤害或其他形式的伤 害。

警告 (ZH-HK)

本服務手冊僅提供英文版本。

- 倘若客戶的服務供應商需要英文以外之服務手冊，客戶有責任提供翻譯服務。
- 除非已參閱本服務手冊及明白其內容，否則切勿嘗試維修設備。
- 不遵從本警告或會令服務供應商、網絡供應商或病人受到觸電、機械性或其他的危險。

警告 (ZH-TW)

本維修手冊僅有英文版。

- 若客戶的維修廠商需要英文版以外的語言，應由客戶自行提供翻譯服務。
- 請勿試圖維修本設備，除非 您已查閱並瞭解本維修手冊。
- 若未留意本警告，可能導致維修廠商、操作員或病患因觸電、機械或其他危險而受傷。

UPOZORENJE (HR)

Ovaj servisni priručnik dostupan je na engleskom jeziku.

- Ako davatelj usluge klijenta treba neki drugi jezik, klijent je dužan osigurati prijevod.
- Ne pokušavajte servisirati opremu ako niste u potpunosti pročitali i razumjeli ovaj servisni priručnik.
- Zanemarite li ovo upozorenje, može doći do ozljede davatelja usluge, operatera ili pacijenta uslijed strujnog udara, mehaničkih ili drugih rizika.

VÝSTRAHA (CS)

Tento provozní návod existuje pouze v anglickém jazyce.

- V případě, že externí služba zákazníkům potřebuje návod v jiném jazyce, je zajištění překladu do odpovídajícího jazyka úkolem zákazníka.
- Nesnažte se o údržbu tohoto zařízení, aniž byste si přečetli tento provozní návod a pochopili jeho obsah.
- V případě nedodržování této výstrahy může dojít k poranění pracovníka prodejního servisu, obslužného personálu nebo pacientů vlivem elektrického proudu, respektive vlivem mechanických či jiných rizik.

ADVARSEL (DA)

Denne servicemanual findes kun på engelsk.

- Hvis en kundes tekniker har brug for et andet sprog end engelsk, er det kundens ansvar at sørge for oversættelse.
- Forsøg ikke at servicere udstyret uden at læse og forstå denne servicemanual.
- Manglende overholdelse af denne advarsel kan medføre skade på grund af elektrisk stød, mekanisk eller anden fare for teknikeren, operatøren eller patienten.

WAARSCHUWING (NL)

Deze onderhoudshandleiding is enkel in het Engels verkrijgbaar.

- Als het onderhoudspersoneel een andere taal vereist, dan is de klant verantwoordelijk voor de vertaling ervan.
- Probeer de apparatuur niet te onderhouden alvorens deze onderhoudshandleiding werd geraadpleegd en begrepen is.
- Indien deze waarschuwing niet wordt opgevolgd, zou het onderhoudspersoneel, de operator of een patiënt gewond kunnen raken als gevolg van een elektrische schok, mechanische of andere gevaren.

WARNING (EN)

This service manual is available in English only.

- If a customer's service provider requires a language other than English, it is the customer's responsibility to provide translation services.
- Do not attempt to service the equipment unless this service manual has been consulted and is understood.
- Failure to heed this warning may result in injury to the service provider, operator or patient from electric shock, mechanical or other hazards.

HOIATUS (ET)

See teenindusjuhend on saadaval ainult inglise keeles.

- Kui klienditeeninduse osutaja nõuab juhendit inglise keelest erinevas keeles, vastutab klient tõlketeenuse osutamise eest.
- Ärge üritage seadmeid teenindada enne eelnevalt käesoleva teenindusjuhendiga tutvumist ja sellest aru saamist.
- Käesoleva hoiatuse eiramine võib põhjustada teenuseosutaja, operaatori või patsiendi vigastamist elektrilöögi, mehaanilise või muu ohu tagajärjel.

VAROITUS (FI)

Tämä huolto-ohje on saatavilla vain englanniksi.

- Jos asiakkaan huoltohenkilöstö vaatii muuta kuin englanninkielistä materiaalia, tarvittavan käännöksen hankkiminen on asiakkaan vastuulla.
- Älä yritä korjata laitteistoa ennen kuin olet varmasti lukenut ja ymmärtänyt tämän huolto-ohjeen.
- Mikäli tätä varoitusta ei noudateta, seurauksena voi olla huoltohenkilöstön, laitteiston käyttäjän tai potilaan vahingoittuminen sähköiskun, mekaanisen vian tai muun vaaratilanteen vuoksi.

ATTENTION (FR)

Ce manuel d'installation et de maintenance est disponible uniquement en anglais.

- Si le technicien d'un client a besoin de ce manuel dans une langue autre que l'anglais, il incombe au client de le faire traduire.
- Ne pas tenter d'intervenir sur les équipements tant que ce manuel d'installation et de maintenance n'a pas été consulté et compris.
- Le non-respect de cet avertissement peut entraîner chez le technicien, l'opérateur ou le patient des blessures dues à des dangers électriques, mécaniques ou autres.

WARNUNG (DE)

Diese Serviceanleitung existiert nur in englischer Sprache.

- Falls ein fremder Kundendienst eine andere Sprache benötigt, ist es Aufgabe des Kunden für eine entsprechende Übersetzung zu sorgen.
- Versuchen Sie nicht diese Anlage zu warten, ohne diese Serviceanleitung gelesen und verstanden zu haben.
- Wird diese Warnung nicht beachtet, so kann es zu Verletzungen des Kundendiensttechnikers, des Bedieners oder des Patienten durch Stromschläge, mechanische oder sonstige Gefahren kommen.

ΠΡΟΕΙΔΟΠΟΙΗΣΗ (EL)

Το παρόν εγχειρίδιο σέρβις διατίθεται μόνο στα αγγλικά.

- Εάν ο τεχνικός σέρβις ενός πελάτη απαιτεί το παρόν εγχειρίδιο σε γλώσσα εκτός των αγγλικών, αποτελεί ευθύνη του πελάτη να παρέχει τις υπηρεσίες μετάφρασης.
- Μην επιχειρήσετε την εκτέλεση εργασιών σέρβις στον εξοπλισμό αν δεν έχετε συμβουλευτεί και κατανοήσει το παρόν εγχειρίδιο σέρβις.
- Αν δεν προσέξετε την προειδοποίηση αυτή, ενδέχεται να προκληθεί τραυματισμός στον τεχνικό σέρβις, στο χειριστή ή στον ασθενή από ηλεκτροπληξία, μηχανικούς ή άλλους κινδύνους.

FIGYELMEZTETÉS (HU)

Ezen karbantartási kézikönyv kizárólag angol nyelven érhető el.

- Ha a vevő szolgáltatója angoltól eltérő nyelvre tart igényt, akkor a vevő felelőssége a fordítás elkészíttetése.
- Ne próbálja elkezdeni használni a berendezést, amíg a karbantartási kézikönyvben leírtakat nem értelmezték.
- Ezen figyelmeztetés figyelmen kívül hagyása a szolgáltató, működtető vagy a beteg áramütés, mechanikai vagy egyéb veszélyhelyzet miatti sérülését eredményezheti.

AÐVÖRUN (IS)

Þessi þjónustuhandbók er aðeins fáanleg á ensku.

- Ef að þjónustuveitandi viðskiptamanns þarfnast annas tungumáls en ensku, er það skylda viðskiptamanns að skaffa tungumálaþjónustu.
- Reynið ekki að afgreiða tækið nema að þessi þjónustuhandbók hefur verið skoðuð og skilin.
- Brot á sinna þessari aðvörun getur leitt til meiðsla á þjónustuveitanda, stjórnanda eða sjúklings frá raflosti, vélrænu eða öðrum áhættum.

AVVERTENZA (IT)

Il presente manuale di manutenzione è disponibile soltanto in lingua inglese.

- Se un addetto alla manutenzione richiede il manuale in una lingua diversa, il cliente è tenuto a provvedere direttamente alla traduzione.
- Procedere alla manutenzione dell'apparecchiatura solo dopo aver consultato il presente manuale ed averne compreso il contenuto.
- Il mancato rispetto della presente avvertenza potrebbe causare lesioni all'addetto alla manutenzione, all'operatore o ai pazienti provocate da scosse elettriche, urti meccanici o altri rischi.

警告 (JA)

このサービスマニュアルには英語版しかありません。

- サービスを担当される業者が英語以外の言語を要求される場合、翻訳作業はその業者の責任で行うものとさせていただきます。
- このサービスマニュアルを熟読し理解せずに、装置のサービスを行わないでください。
- この警告に従わない場合、サービスを担当される方、操作員あるいは患者 さんが、感電や機械的又はその他の危険により負傷する可能性があります。

경고 (KO)

본 서비스 매뉴얼은 영어로만 이용하실 수 있습니다.

- 고객의 서비스 제공자가 영어 이외의 언어를 요구할 경우, 번역 서비스를 제공하는 것은 고객의 책임입니다.
- 본 서비스 매뉴얼을 참조하여 숙지하지 않은 이상 해당 장비를 수리하려고 시도하지 마십시오.
- 본 경고 사항에 유의하지 않으면 전기 쇼크, 기계적 위험, 또는 기타 위험으로 인해 서비스 제공자, 사용자 또는 환자에게 부상을 입힐 수 있습니다.

BRĪDINĀJUMS (LV)

Šī apkopes rokasgrāmata ir pieejama tikai angļu valodā.

- Ja klienta apkopes sniedzējam nepieciešama informācija citā valodā, klienta pienākums ir nodrošināt tulkojumu.
- Neveiciet aprīkojuma apkopi bez apkopes rokasgrāmatas izlasīšanas un saprašanas.
- Šī brīdinājuma neievērošanas rezultātā var rasties elektriskās strāvas trieciena, mehānisku vai citu faktoru izraisītu traumu risks apkopes sniedzējam, operatoram vai pacientam.

ĮSPĖJIMAS (LT)

Šis eksploatavimo vadovas yra tik anglų kalba.

- Jei kliento paslaugų tiekėjas reikalauja vadovo kita kalba – ne anglų, suteikti vertimo paslaugas privalo klientas.
- Nemėginkite atlikti įrangos techninės priežiūros, jei neperskaitėte ar nesupratote šio eksploatavimo vadovo.
- Jei nepaisysite šio įspėjimo, galimi paslaugų tiekėjo, operatoriaus ar paciento sužalojimai dėl elektros šoko, mechaninių ar kitų pavojų.

ADVARSEL (NO)

Denne servicehåndboken finnes bare på engelsk.

- Hvis kundens serviceleverandør har bruk for et annet språk, er det kundens ansvar å sørge for oversettelse.
- Ikke forsøk å reparere utstyret uten at denne servicehåndboken er lest og forstått.
- Manglende hensyn til denne advarselen kan føre til at serviceleverandøren, operatøren eller pasienten skades på grunn av elektrisk støt, mekaniske eller andre farer.

OSTRZEŻENIE (PL)

Niniejszy podręcznik serwisowy dostępny jest jedynie w języku angielskim.

- Jeśli serwisant klienta wymaga języka innego niż angielski, zapewnienie usługi tłumaczenia jest obowiązkiem klienta.
- Nie próbować serwisować urządzenia bez zapoznania się z niniejszym podręcznikiem serwisowym i zrozumienia go.
- Niezastosowanie się do tego ostrzeżenia może doprowadzić do obrażeń serwisanta, operatora lub pacjenta w wyniku porażenia prądem elektrycznym, zagrożenia mechanicznego bądź innego.

ATENÇÃO (PT-BR)

Este manual de assistência técnica encontra-se disponível unicamente em inglês.

- Se outro serviço de assistência técnica solicitar a tradução deste manual, caberá ao cliente fornecer os serviços de tradução.
- Não tente reparar o equipamento sem ter consultado e compreendido este manual de assistência técnica.
- A não observância deste aviso pode ocasionar ferimentos no técnico, operador ou paciente decorrentes de choques elétricos, mecânicos ou outros.

ATENÇÃO (PT-PT)

Este manual de assistência técnica só se encontra disponível em inglês.

- Se qualquer outro serviço de assistência técnica solicitar este manual noutro idioma, é da responsabilidade do cliente fornecer os serviços de tradução.
- Não tente reparar o equipamento sem ter consultado e compreendido este manual de assistência técnica.
- O não cumprimento deste aviso pode colocar em perigo a segurança do técnico, do operador ou do paciente devido a choques eléctricos, mecânicos ou outros.

ATENŢIE (RO)

Acest manual de service este disponibil doar în limba engleză.

- Dacă un furnizor de servicii pentru clienți necesită o altă limbă decât cea engleză, este de datoria clientului să furnizeze o traducere.
- Nu încercați să reparați echipamentul decât ulterior consultării și înțelegerii acestui manual de service.
- Ignorarea acestui avertisment ar putea duce la rănirea depanatorului, operatorului sau pacientului în urma pericolelor de electrocutare, mecanice sau de altă natură.

ОСТОРОЖНО! (RU)

Данное руководство по техническому обслуживанию представлено только на английском языке.

- Если сервисному персоналу клиента необходимо руководство не на английском, а на каком-то другом языке, клиенту следует самостоятельно обеспечить перевод.
- Перед техническим обслуживанием оборудования обязательно обратитесь к данному руководству и поймите изложенные в нем сведения.
- Несоблюдение требований данного предупреждения может привести к тому, что специалист по техобслуживанию, оператор или пациент получит удар электрическим током, механическую травму или другое повреждение.

UPOZORENJE (SR)

Ovo servisno uputstvo je dostupno samo na engleskom jeziku.

- Ako klijentov serviser zahteva neki drugi jezik, klijent je dužan da obezbedi prevodilačke usluge.
- Ne pokušavajte da opravite uređaj ako niste pročitali i razumeli ovo servisno uputstvo.
- Zanemarivanje ovog upozorenja može dovesti do povređivanja servisera, rukovaoca ili pacijenta usled strujnog udara ili mehaničkih i drugih opasnosti.

UPOZORNENIE (SK)

Tento návod na obsluhu je k dispozícii len v angličtine.

- Ak zákazníkov poskytovateľ služieb vyžaduje iný jazyk ako angličtinu, poskytnutie prekladateľských služieb je zodpovednosťou zákazníka.
- Nepokúšajte sa o obsluhu zariadenia, kým si neprečítate návod na obluhu a neporozumiete mu.
- Zanedbanie tohto upozornenia môže spôsobiť zranenie poskytovateľa služieb, obsluhujúcej osoby alebo pacienta elektrickým prúdom, mechanické alebo iné ohrozenie.

ATENCION (ES)

Este manual de servicio sólo existe en inglés.

- Si el encargado de mantenimiento de un cliente necesita un idioma que no sea el inglés, el cliente deberá encargarse de la traducción del manual.
- No se deberá dar servicio técnico al equipo, sin haber consultado y comprendido este manual de servicio.
- La no observancia del presente aviso puede dar lugar a que el proveedor de servicios, el operador o el paciente sufran lesiones provocadas por causas eléctricas, mecánicas o de otra naturaleza.

VARNING (SV)

Den här servicehandboken finns bara tillgänglig på engelska.

- Om en kunds servicetekniker har behov av ett annat språk än engelska, ansvarar kunden för att tillhandahålla översättningstjänster.
- Försök inte utföra service på utrustningen om du inte har läst och förstår den här servicehandboken.
- Om du inte tar hänsyn till den här varningen kan det resultera i skador på serviceteknikern, operatören eller patienten till följd av elektriska stötar, mekaniska faror eller andra faror.

OPOZORILO (SL)

Ta servisni priročnik je na voljo samo v angleškem jeziku.

- Če ponudnik storitve stranke potrebuje priročnik v drugem jeziku, mora stranka zagotoviti prevod.
- Ne poskušajte servisirati opreme, če tega priročnika niste v celoti prebrali in razumeli.
- Če tega opozorila ne upoštevate, se lahko zaradi električnega udara, mehanskih ali drugih nevarnosti poškoduje ponudnik storitev, operater ali bolnik.

DİKKAT (TR)

Bu servis kılavuzunun sadece ingilizcesi mevcuttur.

- Eğer müşteri teknisyeni bu kılavuzu ingilizce dışında bir başka lisandan talep ederse, bunu tercüme ettirmek müşteriye düşer.
- Servis kılavuzunu okuyup anlamadan ekipmanlara müdahale etmeyiniz.
- Bu uyarıya uyulmaması, elektrik, mekanik veya diğer tehlikelerden dolayı teknisyen, operatör veya hastanın yaralanmasına yol açabilir.

This page left intentionally blank.

Revision History

Revision	Date	Reason for change
1	16DEC2008	Initial Release
2	19MAR2009	Added cable shield grounding text to note on Illustration 1 of Electrical Requirements chapter. Resolves SPR XRYge81854. Added MIS Cable Ratings section. Resolves SPR XRYge80442. Added Room Layout drawings section. Resolves SPR XRYge80443. Updated manual to new standardized format.
3	25SEP2009	Updates to address installation services review. Updated System MIS cables details (ECO 2074719). Added bullet list items to Equipment/Room Layout/Clinical Access section regarding wall stand (SPR XRYge83308). Added mounting details for TRAD detector support rail to Chapter 2, Section 1.2.4.2 (SPR XRYge83332). Updated Illustration 2-3 to show table and wallstand anchors (SPR XRYge83331). Updated component weights (SPR XRYge83005). Updated Heat Output specifications (SPR XRYge83306). Added Lean Cart Illustrations 1-3 and 1-4 (SPR XRYge83306).
4	25JAN2010	Updates to Tables 2-3 and 2-5 to add HP xw8600 PC (reference ECO 2093900).
5	21JUN2010	Updates to Figures 2-11, 2-12, 2-13 to change gap between rails and wall to 2” (51mm). Reference SPR XRYge85439. Added weight bearing rolling stand and carbon fiber stretcher specs for dimensions, weights, humidity, temperature, pressure, shipping. Reference SPR XRYge84482. Updated Illustration 2-2, Table 2-3, Section 2.8, Table 2-5 to include details on the Image Pasting Barrier with Footstool. Reference XRYge85046.
6	06JUL2011	Updated Illustration 2-31, Table 2-2 and Table 2-3. Deleted Illustration 2-32. To update required ceiling height when wallstand is located at front of room and to update wallstand dimensions. Also updated useable cable length for MIS 020044/020045 from 7.5m to 12.5m. Reference PR3584858 and PR4895725.

This page left intentionally blank.

Table of Contents

Chapter 1 GENERAL REQUIREMENTS....17

1 Objectives and Overview Summary....17

1.1 Objective and Scope of This Manual....17

1.2 Summary....17

2 Common Product Requirements....18

2.1 Dimensions and Layout....18

3 Delivery Requirements....19

3.1 Door Size Requirements....19

3.2 Minimum Elevator Depth Requirements....19

3.3 Shipping Fixtures and Carts....19

3.4 Shipping Dimensions and Weights....23

3.4.1 Domestic Shipments....23

3.4.2 International Shipments....24

3.5 Preparing the Delivery Route....24

4 Product Storage and Handling Requirements....26

4.1 Relative Humidity and Temperature....26

4.2 Atmospheric Pressure....26

Chapter 2 EQUIPMENT....29

1 System Components....29

1.1 System Components....29

1.2 Room Requirements....32

1.2.1 Acoustic Output....32

1.2.2 Floor Requirements....32

1.2.2.1 Floor Requirements When Using Provided Typical Floor Anchors....32

1.2.2.2 Pan-Type Floor Construction Requirement....33

1.2.3 Ceiling Requirements....34

1.2.4 Wall Requirements....43

1.2.4.1 Grid Holder....43

1.2.4.2 Support Rail for TRAD Detector....45

2 System Component Dimensions and Weights....47
2.1 Dimensions....47
2.2 Table....48
2.3 System Cabinet....49
2.4 Grid Holder....52
2.5 Over-Head Tube Support (OTS)....52
2.6 Wall Stands....62
2.7 Stretcher Tables....64
2.8 Image Pasting Barrier....66
2.9 Weights, Floor/Ceiling Loading and Recommended Mounting Methods....69
3 Room Layout....71
3.1 Required Service Access Clearance....71
3.2 Clinical Access....72
3.3 Peripheral Equipment....72
3.4 Room Layout Drawings....73
4 Seismic....84
4.1 Overview....84
4.2 Calculations....84

Chapter 3 SPECIAL CONSTRUCTION....85
1 Radiation Protection....85

Chapter 4 HVAC....87
1 Environmental Requirements....87
1.1 Relative Humidity and Temperature....87
1.2 Altitude and Atmospheric Pressure....87
1.3 Heat Output....88

Chapter 5 ELECTRICAL....89
1 System Facility Power and Grounds....89
1.1 Introduction....89
1.2 Power Quality....89

1.3 Electrical Grounds....90
1.3.1 System and Facility Grounds....90
1.3.2 Recommended Ground Wire Sizes....90
2 Electrical Requirements....91
2.1 Generator Electrical Requirements....91
2.2 65kW and 80kW System Wire Sizes & kVA Load Characteristics....91
2.3 Recommended Wall “Circuit-Breaker” Ratings....93
2.4 Wiring Electrical Power and Disconnects....94
2.4.1 Room Power Supply....94
2.4.2 Multiple Emergency “OFF” Switches....95
3 Routing Cables....96
3.1 General....96
3.1.1 Electrical Ducts (Recommended)....96
3.1.2 Conduit....96
3.2 Power Distribution....96
4 System Cable Information....97
4.1 Introduction....97
4.2 Cable Information....97
4.2.1 Cable Lengths and Characteristics....97
4.2.2 Cable Terminations (End A)....103
4.2.3 Cable Terminations (End B)....106
4.2.4 Cable Ratings....110
5 Light Specification....114
6 Dimensioned Figures and Drawings....115
6.1 Wall Box....115
6.2 System Equipment Cable Entrance....116

Chapter 6 COMMUNICATIONS/NETWORKING....119
1 Hospital Network....119
1.1 Broadband Network Connection....119
1.2 Phone Line(s) - Voice....119

1.3 Remote Services Broadband Pre-Installation Requirements for Europe.....119
2 Networkflow Audit.....121
2.1 What is the Networkflow Audit.....121
2.2 Facility Information.....121
2.3 Workflow Analysis.....121
2.4 The Physical Network.....122
2.5 System Parameters.....123
2.6 Devices & Services Audit.....125
2.7 Data Flow Analysis.....127
2.8 What Will Happen Next?.....129

Chapter 1 General Requirements

1 Objectives and Overview Summary

1.1 Objective and Scope of This Manual

This document is intended as a guide and informational resource for planning and properly preparing a location for the installation of a Optima XR640 system.

1.2 Summary

The purchaser is responsible for completion of “Pre-Installation.” This includes the procurement and installation of all required materials and services to get the room ready for installation of the product. This responsibility includes providing:

- A clean and safe work environment for installation of the product (finished floor, ceiling, walls, and proper room lighting).
- A location suitable for the installation of the product.
- Suitable support structures in the floor, walls, or ceiling necessary for the mounting of the product and/or its components.
- Installation of conduit, ducts and/or raceways necessary to route cables safely.
- Electrical power and grounds of specified quality and reliability.
- Electrical power of the required voltage, including an Emergency-Off safety switch in the room. Power and ground cables to the PDU.
- Properly installed and sized junction boxes, including covers and fittings at locations required and called out in architectural drawings.
- Use GE-recommended wires and cables as defined in this document.

2 Common Product Requirements

2.1 Dimensions and Layout

Carefully check room layouts for adequate radiographic coverage, necessary clearances and provision for related equipment. Good judgement is required to avoid compromising important features. There must be ample maneuvering space allowed for the hospital cart and for personnel around the table.

3 Delivery Requirements

3.1 Door Size Requirements

Minimum door sizes also apply to hallway and elevator.

Door Height: The minimum door height accommodated is 170 cm (66.9 in) when the Wall Stand is tilted on the dolly.

Door Width:

- The minimum door width to accommodate the Table is: 91.7 cm (36 in).
- The minimum door width is calculated based on a straight-in approach requiring a 2.5 m (8 ft) wide corridor. Minimum widths will change based on narrower corridors.
- The minimum door width to accommodate the Image Paste Barrier is 1.02 m (40.5 in) wide x 2.05 m (80.9 in) high.

3.2 Minimum Elevator Depth Requirements

The minimum elevator depth to accommodate is 2.4 m (94.48 in) when the Wall Stand is tilted on the dolly.

3.3 Shipping Fixtures and Carts

Delivery of the Systems Cabinet utilizes a special shipping dolly. The dimensions are shown in Illustration 1-1.

Illustration 1-1: System Cabinet Shipping Dolly Dimensions

Values represent Maximum Values (Actual values may vary but will not exceed those specified)

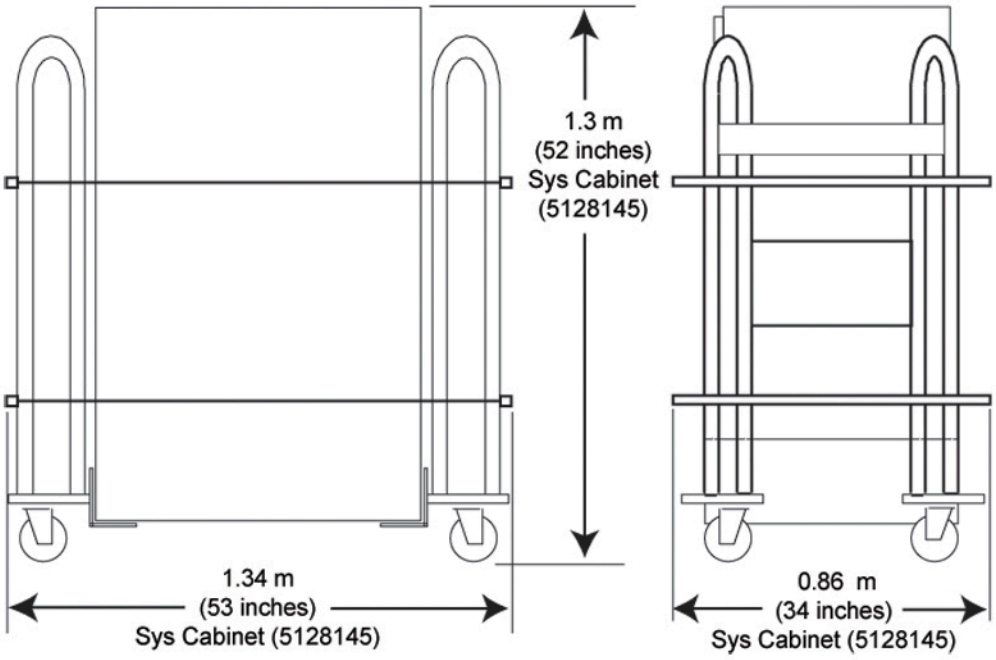

The wall stand is also delivered on a fixture. See Illustration 1-2.

Illustration 1-2: Wall Stand: Site In-Transit Dimensions

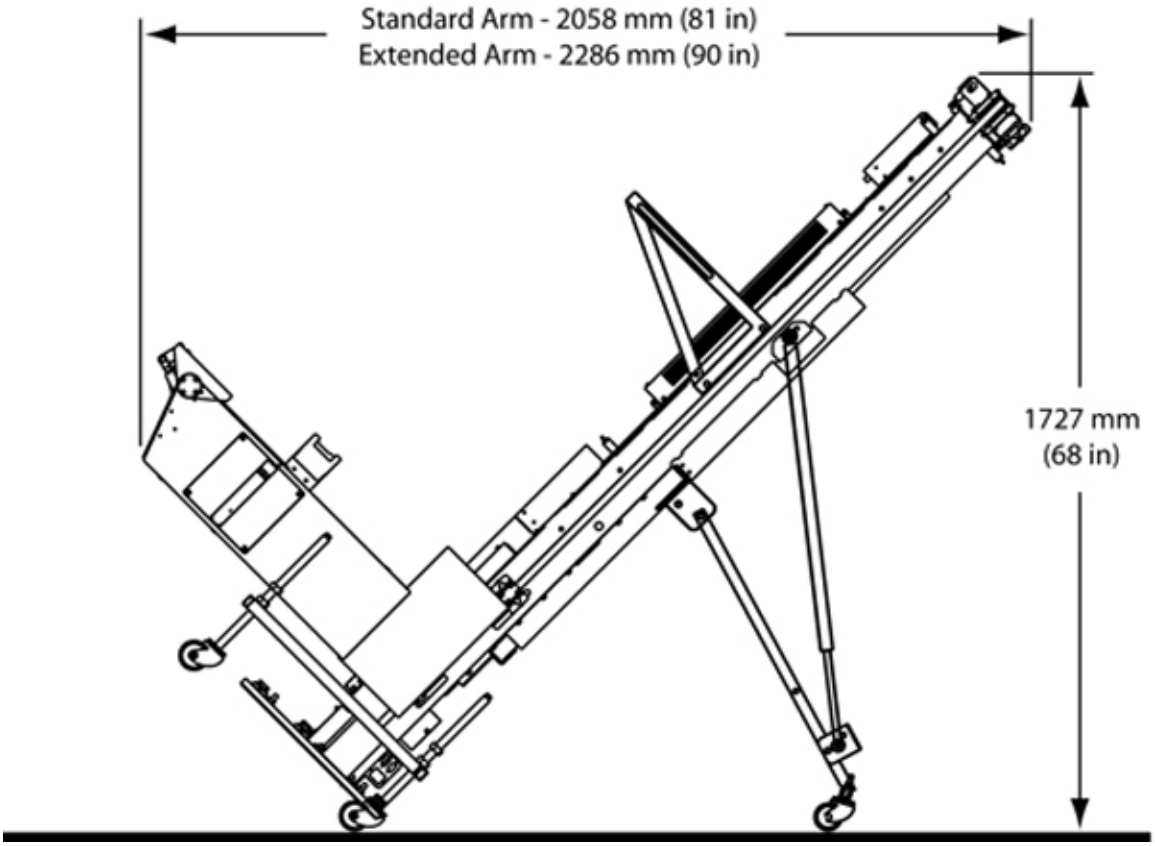

Some system components are packed into two “Lean Carts”. See Illustration 1-3 and Illustration 1-4.

Illustration 1-3: Exam Room Lean Cart

Illustration 1-4: Control and Options Lean Cart

3.4 Shipping Dimensions and Weights

3.4.1 Domestic Shipments

Table 1-1: DOMESTIC SHIPPING DATA

Component	Shipping Data				
	Shipping Dimensions (Approx)			SHIPPING WEIGHT (approx)	SHIPPING METHOD
	Length	Width	Height		
Overhead Tube Support including X-ray tube	864 mm (34 in)	1039 mm (41 in)	1355 mm (53.5 in)	288 kg (635 lbs)	box/crate/skid
Stationary Rail (5.79m) (set of 2 rails)	5.92 m (233 in)	178 mm (7 in)	76 mm (3 in)	68 kg (150 lbs)	box
2 Meter Bridge	2210 mm (87 in)	737 mm (29 in)	178 mm (7 in)	63 kg (138 lbs)	box
3 Meter Bridge	3099 mm (122 in)	737 mm (29 in)	178 mm (7 in)	84 kg (185 lbs)	box
4 Meter Bridge	5080 mm (200 in)	737 mm (29 in)	203 mm (8 in)	138 kg (305 lbs)	box
2 Meter Cable Assembly	813 mm (32 in)	584 mm (23 in)	229 mm (9 in)	45 kg (100 lbs)	box/skid
3 Meter Cable Assembly	813 mm (32 in)	584 mm (23 in)	229 mm (9 in)	49 kg (108.lbs)	box/skid

4 Meter Cable Assembly	813 mm (32 in)	584 mm (23 in)	229 mm (9 in)	50 kg (110.lbs)	box/skid
System Cabinet	1321 mm (53 in)	864 mm (34 in)	1321 mm (52 in)	406 kg (895 lbs)	dolly - See Figure 5-10
System Cabinet Hardware	1300 mm (51 in)	860 mm (34 in)	610 mm (24 in)	151 kg (332 lbs)	box
Wall Stand	2440 mm (96 in)	940 mm (37 in)	1270 mm (50 in)	464 kg (1023 lbs)	crate / skid
Extended Wall Stand	2440 mm (96 in)	940 mm (37 in)	1651 mm (65 in)	493 kg (1087 lbs)	crate / skid
Detector Asm	1042 mm (41 in)	1194 mm (47 in)	737 mm (29 in)	88 kg (194 lbs)	crate/skid
Table Assembly	2400 mm (95 in)	1100 mm (44 in)	1300 mm (51 in)	602 kg (1327 lbs)	box / skid
Stretcher: Non-elevating (Option)	2312 mm (91 in)	1042 mm (41 in)	940 mm (37 in)	164 kg (360 lbs)	box / skid
Stretcher: Carbon Fiber Non-elevating (Option)	2300 mm (90.5 in)	770 mm (30 in)	230 mm (9 in)	70 kg (154 lbs)	crate
Stretcher: Elevating (Option)	2250 mm (99 in)	920 mm (37 in)	810 mm (32 in)	350 kg (772 lbs)	crate/skid
Exam Room Lean Cart	2134 mm (84 in)	762 mm (30 in)	1524 mm (60 in)	varies	wheeled cart
Control & Options Lean Cart	1308 mm (51.5 in)	762 mm (30 in)	1397 mm (55 in)	varies	wheeled cart

3.4.2 International Shipments

Table 1-2: INTERNATIONAL SHIPPING DATA

PRODUCT OR COMPONENT	SHIPPING DATA				
	SHIPPING DIMENSIONS (APPROX.)			SHIPPING WEIGHT (approx.)	SHIPPING METHOD
	LENGTH	WIDTH	HEIGHT		
Overhead Tube Support including X-ray tube	864 mm (34 in)	1039 mm (41 in)	1355 mm (53.5 in)	288 kg (635 lbs)	box/crate/skid
Stationary Rail (5.79m) (set of 2 rails)	6120 mm (241 in)	380 mm (15 in)	230 mm (9 in)	118 kg (260 lbs)	box
3m Bridge	3180 mm (125 in)	840 mm (33 in)	510 mm (20 in)	165 kg (364 lbs)	box
3 Meter Cable Assembly	1450 mm (57 in)	860 mm (34 in)	460 mm (18 in)	96 kg (212lbs)	box/skid
System Cabinet	1321 mm (53 in)	864 mm (34 in)	1321 mm (52 in)	406 kg (895 lbs)	dolly - See Figure 5-10
System Cabinet Hardware	1300 mm (51 in)	860 mm (34 in)	610 mm (24 in)	151 kg (332 lbs)	box
Wall Stand	2440 mm (96 in)	940 mm (37 in)	1270 mm (50 in)	464 kg (1023 lbs)	crate / skid
Extended Wall Stand	2440 mm (96 in)	940 mm (37 in)	1651 mm (65 in)	493 kg (1087 lbs)	crate / skid
Detector Asm	1042 mm (41 in)	1194 mm (47 in)	737 mm (29 in)	93 kg (204 lbs)	crate/skid
Table Assembly	2400 mm (95 in)	1100 mm (44 in)	1300 mm (51 in)	602 kg (1327 lbs)	box / skid

3.5 Preparing the Delivery Route

1. Sketch out the Route

Begin preparing Route Survey by sketching the area of the hospital or clinic which will receive the equipment. Include all areas on the delivery route from outside of building to destination. See sample sketch below in .

NOTE: The reference numbers in circles refer to the Route Survey data shown in . The Route Survey is a form on which site data is listed .

Illustration 1-5: Sample Route

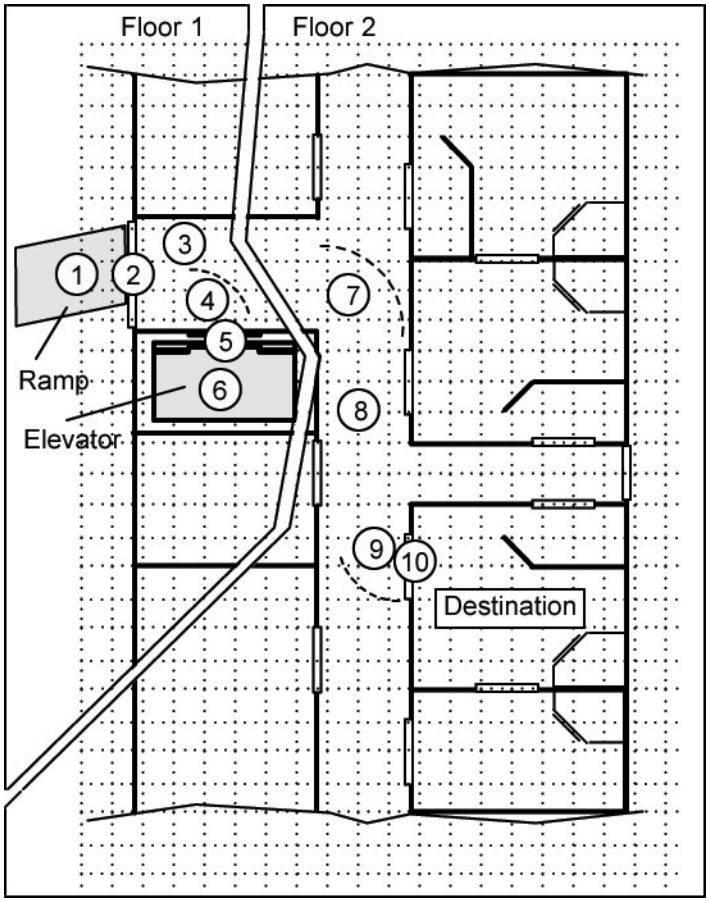

2. Survey the Route

   Record all loading capacities, corridor widths, door openings, turning radii, flooring materials, elevator sizes, obstructions and so on for reference.

3. Check the Route

   Verify equipment can actually be transported via the route determined.

4 Product Storage and Handling Requirements

4.1 Relative Humidity and Temperature

This section provides information for the environmental requirements for the storage of the system.

NOTE: STORAGE values only refer to equipment that is still in shipping containers. If the equipment is partially or completely installed, refer to IN-USE values.

Table 1-3: Environmental Requirements (Relative Humidity & Temperature)

Product or Component	Relative Humidity (Non-Condensing)				Temperature			
	IN-USE		STORAGE		IN-USE		STORAGE	
	MIN	MAX	MIN	MAX	MIN.	MAX.	MIN.	MAX.
Digital Detector	10%	95%	10%	95%	50° F (10° C)	95° F (35° C)	32° F (0° C)	122° F (50° C)
Wall Stand / Extended Wall Stand	20%	80%	10%	95%	50° F (10° C)	104° F (40° C)	-22° F (-30° C)	158° F (70° C)
Table (TBL)	20%	85%	20%	95%	50° F (10° C)	104° F (40° C)	0° F (-18° C)	158° F (70° C)
OTS	20%	85%	20%	95%	50° F (10° C)	104° F (40° C)	0° F (-18° C)	158° F (70° C)
System Cabinet (SKL1)	20%	80%	5%	95%	59° F (15° C)	95° F (35° C)	-40° F (-40° C)	158° F (70° C)
Maxiray 100-09 X-ray Tube (RAD)	-	-	-	-	0	104° F (40° C)	-20° F (-29° C)	104° F (40° C)
Operator Console:								
PC Tower	8%	85%	8%	90%	40° F (5° C)	95° F (35° C)	-40° F (-40° C)	140° F (60° C)
LCD Monitor	30%	80%	10%	85%	41° F (5° C)	95° F (35° C)	-14° F (-10° C)	140° F (60° C)
Radiographic Stretcher Table (optional)	20%	95%	20%	95%	50° F (10° C)	104° F (40° C)	0° F (-18° C)	158° F (70° C)
Carbon Fiber Stretcher Table (optional)	30%	75%	10%	100%	50° F (10° C)	104° F (40° C)	-4° F (-20° C)	140° F (60° C)

Limits for rates of change:

In-Use	Storage
< 10 degree C / hour	< 20 degree C / hour
< 30% / hour	< 30% / hour

NOTE: STORAGE values only refer to equipment that is still in shipping containers. If the equipment is partially or completely installed, refer to IN-USE values.

4.2 Atmospheric Pressure

Table 1-4: Environmental Requirements - (Altitude & Atmospheric Pressure)

PRODUCT OR COMPONENT	ALTITUDE				ATMOSPHERIC PRESSURE			
	MIN	MAX	MIN	MAX	MIN	MAX.	MIN	MAX.
Total System Limits	-30.5 m (-100 ft)	3048 m (10,000 ft)	-30.5 m (-100 ft)	2440 m (8005 ft)	650 kPa	1060 kPa	500 kPa	1060 kPa

Limits for rates of change:

In-Use:	Storage:
< 1.8 kPA / hour	< 76 kPA / hour

NOTE: STORAGE values only refer to equipment that is still in shipping containers. If the equipment is partially or completely installed, refer to IN-USE values.

This page left intentionally blank.

Chapter 2 Equipment

1 System Components

1.1 System Components

The Optima XR640 system may consist of the following components:

- Elevating Table with a TRAD Portable Detector
- JEDI X-ray Control Sub-system and Power Unit (1 System Cabinet)
- Overhead Tube Support (OTS)
- TRAD Portable Detector Wallstand with Tilting Receptor, Ion Chamber and Removable Grid
- Workstation with 2 Monitors, Keyboard, Mouse, RCIM, and Bar Code Reader

Illustration 2-1: System Component Identification

The Optima XR640 system can include the following free-standing components, which can be purchased as options (see Illustration 2-2):

- Wall Stand Stretcher (Non-elevating)
- Extended Wall Stand Stretcher (Elevating)
- Carbon Fiber Mobile Table (Non-elevating)

- Image Pasting Patient Barrier (included with the Wallstand Image Pasting option)
- Weight Bearing Rolling Stand

Illustration 2-2: Optional System Component Identification

1.2 Room Requirements

1.2.1 Acoustic Output

Table 2-1: System Acoustic Output

COMPONENT	SOUND OUTPUT (dBA)	
	IN-USE (measured 1m from any point in system)	STAND-BY (measured 1m from any point in system)
System	< 55	< 55

1.2.2 Floor Requirements

The preferred method of installing the wall stand is to use the provided typical floor anchors (Non-Seismic ONLY).

1.2.2.1 Floor Requirements When Using Provided Typical Floor Anchors

⚠CAUTION

Concrete area for wall stand installation should be 1 m^2 (39.37 in^2).
Anchors must be a minimum of 90 mm (3.54 in) from any concrete edge including ducts and cracks. In addition, the general condition of the concrete in the immediate mounting area should be inspected to ensure that anchors will be set in good quality concrete.

The floor bearing the system is recommended to be concrete and the thickness to be determined by a Structural Engineer to properly support the equipment loads. The supplied anchors require a minimum embedment of 90 mm (3.54 in) into the concrete. If the floor thickness is less than 95 mm (3.74 in), it is recommended that the unit be secured using a through-bolt method with a reinforcement plate on the back side.

Illustration 2-3: Typical Floor Anchors

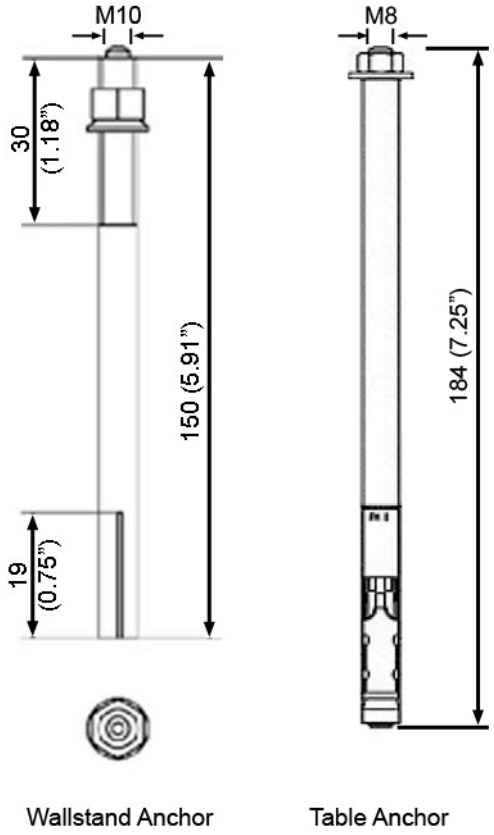

1.2.2.2 Pan-Type Floor Construction Requirement

For pan-type floor construction, steel channels must be designed by a local structural engineer to span floor joists. See Illustration 2-4.

Illustration 2-4: Thru-Bolt Floor Mounting (Pan-Type Floor Construction)

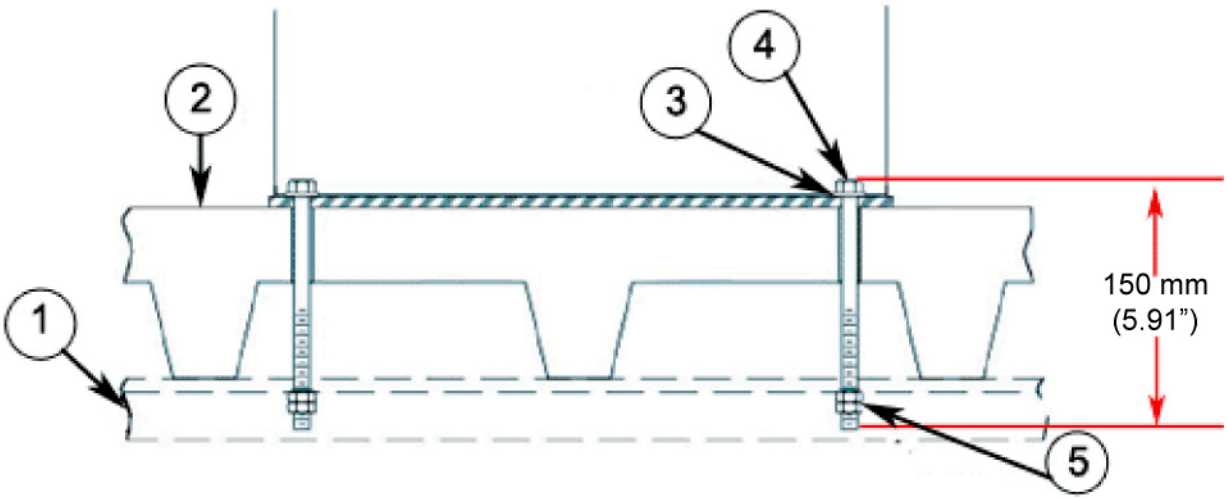

Item	Description
1	For Pan-Type Floor Construction Joists Must Be Spanned With Steel Channels (Customer Furnished)
2	Floor
3	Flat Washer
4	Thru Bolt for 16 mm (Hole Of Appropriate Length.)
5	2-Hex Nuts

1.2.3 Ceiling Requirements

NOTE:

- To allow installation of the stationary rail cross-members, clearance is required between the ends of the stationary rails and the walls.
- It is recommended that sprinkler heads not be placed between the stationary rails. All sprinkler heads should be mounted so they do not extend downward more than 1/4" (6.35 mm) from the ceiling while in the ’resting’ position.
- In addition, there should not be anything mounted in the ceiling (i.e. lights, A/C returns, etc) between the stationary rails. This is because the OTS longitudinal drive belt assembly is located on the movable bridge, approximately centered between the two stationary rails, and may come into contact with those ceiling-mounted items during normal use.

Stationary rails are designed for top (ceiling) mounting. Rails can be ordered and are supplied in 4 inch (10.2 cm) increments between 134 inches (3.4 m) and 222 inches (5.64 m), plus a 228 inch (5.79 m) length totaling 24 different sizes. The choice of length depends on room size, configuration and the possible presence of obstructions.

Complete details of room dimensions must be known when planning an installation. Work with the architect or building engineer and obtain approval from the customer before proceeding with the layout plan.

Methods of support that will permit attachment to structural steel or through bolts in concrete construction should be favored. Do not use anchors in direct tension.

Each rail has mounting holes on 660 mm (26 in) centers with the first hole located 55 mm (2 in) from the rail mount end. The last hole is located either 55 mm (2 in) from the other end with a variable space of less than 660 mm (25.98 in) between it and the second last hole.

Table 2-2: Recommended and Minimum Room Heights (Floor to Top of Longitudinal Rail)

	Specifications	Ceiling
2M, 3M or 4-Meter Bridge	Recommended	2895.6 mm (114")
2M, 3M or 4-Meter Bridge	Minimum	2692.4 mm (106")
Wallstand at Front position	Minimum	2870.2 mm (113")

Referring to the layout drawings, the ± 3 mm (1/8 inch) requirement for parallelism of the stationary rail is critical. Therefore, great care must be exercised in locating the mounting points. Illustration 2-5 through Illustration 2-10 outline requirements that the stationary rail mounting interface must meet.

For site planning, please refer to the Illustrations in the OTS section of Chapter 2 - Equipment / System Component Dimensions and Weights .

For low ceiling height, the stationary rails may be mounted directly to the ceiling slab or to flush-mounted Unistrut or similar structure. For higher rooms in which a false ceiling is to be used, the stationary rails may be attached to rigid vertical members hung from the ceiling slab. A supplementary channel may be secured to the bottom of the vertical members to facilitate provision for mounting holes. A Unistrut system or equivalent is a convenient type of support to employ. See Illustration 2-8 and Illustration 2-9.

Illustration 2-5: 4 Meter Bridge Specifications for a Typical 5.44 m (17 foot - 10 inch) Stationary Rail Mounting Interface (Both Rails Ceiling Mounted)

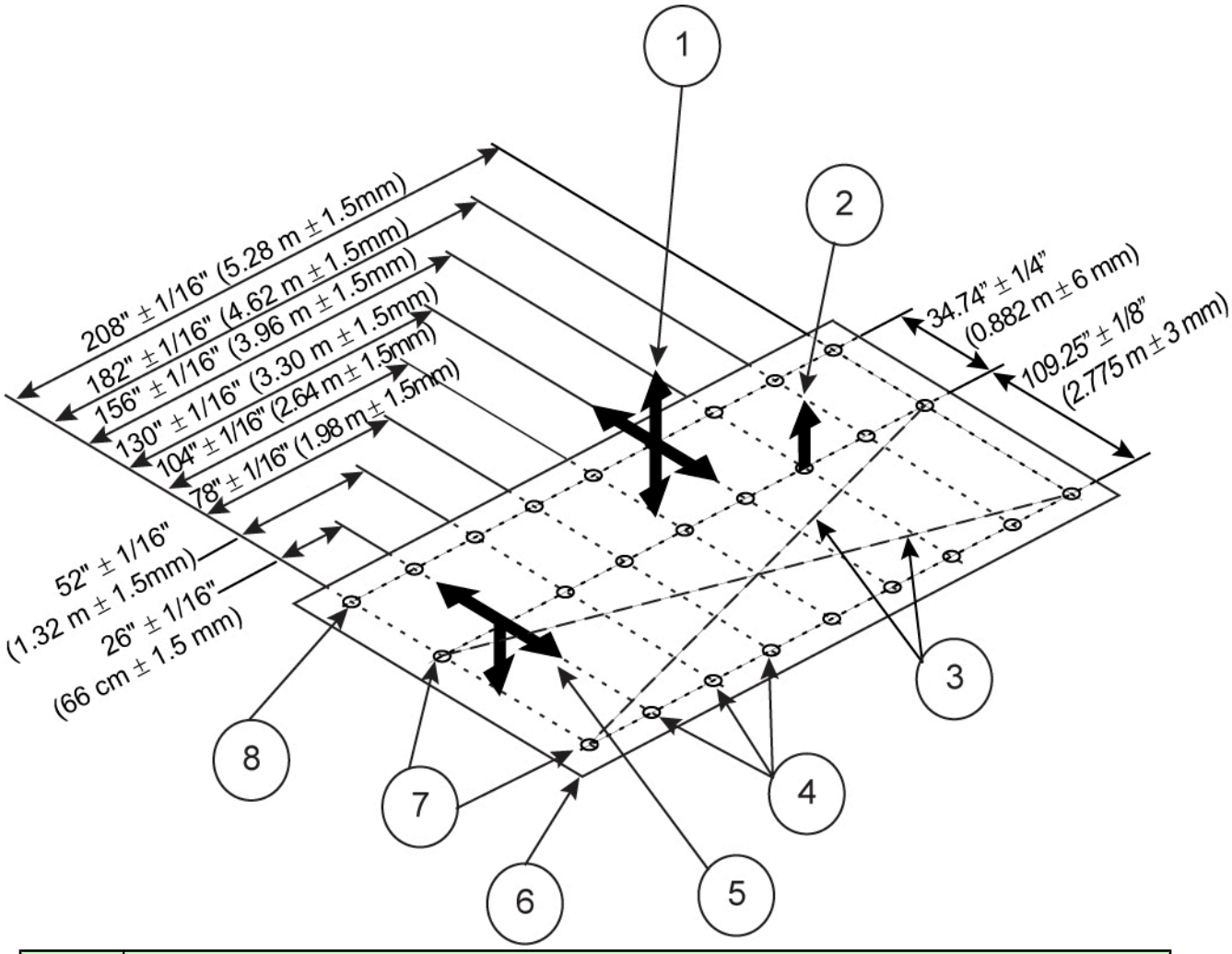

Item	Description
1	When a 50 lb. (22.7 kg) force is applied vertically upward, vertically downward, or horizontally at any support rail mounting point, the attachment interface must not deflect more than 1/16” (1.5 mm).
2	When a 100 lb. (45.4 kg) force is applied vertically upward at any stationary rail mounting point, the attachment interface MUST not deflect more than 1/16” (1.5 mm).
3	Diagonals must be equal within ±1/4” (6.5 mm).
4	All mounting points must be located on a common centerline within ±1/16” (1.5 mm).
5	When a 300 lb. (136 kg) load is applied vertically downward or horizontally at any stationary rail mounting point, the attachment interface MUST not deflect more than 1/16” (1.5 mm).
6	All mounting points must be in the same horizontal plane within ±3/32” (2.4 mm)
7	Stationary rail mounting points must be parallel within ±1/8” (3 mm)
8	Cable takeup support rail mounting points

Illustration 2-6: 3 Meter Bridge Specifications for a Typical 4.1 m (16 foot - 10 inch) Stationary Rail Mounting Interface (Both Rails Ceiling Mounted)

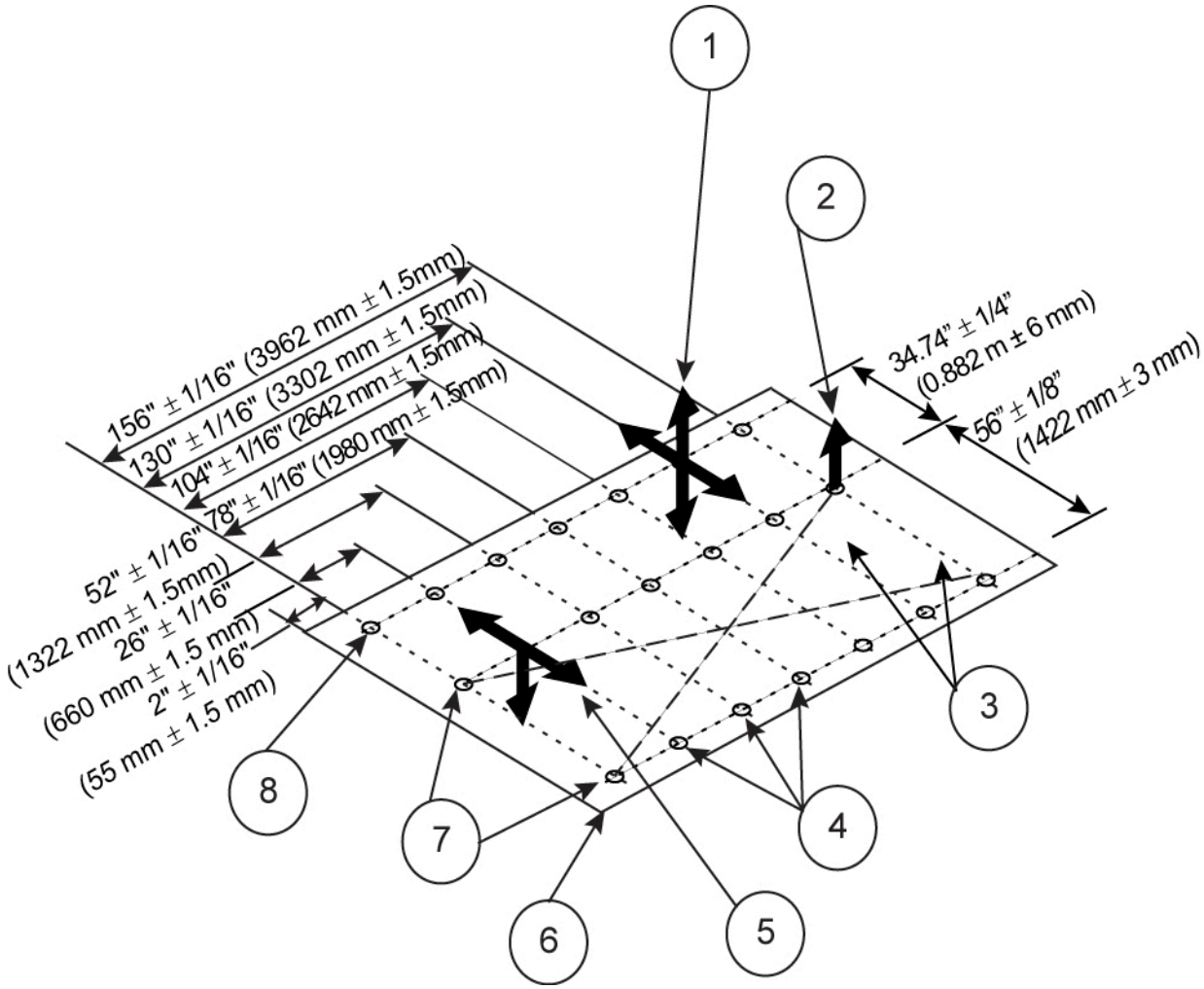

Item	Description
1	When a 50 lb. (22.7 kg) force is applied vertically upward, vertically downward, or horizontally at any support rail mounting point, the attachment interface must not deflect more than 1/16” (1.5 mm).
2	When a 100 lb. (45.4 kg) force is applied vertically upward at any stationary rail mounting point, the attachment interface MUST not deflect more than 1/16” (1.5 mm).
3	Diagonals must be equal within ±1/4” (6.5 mm).
4	All mounting points must be located on a common centerline within ±1/16” (1.5 mm).
5	When a 300 lb. (136 kg) load is applied vertically downward or horizontally at any stationary rail mounting point, the attachment interface MUST not deflect more than 1/16” (1.5 mm).
6	All mounting points must be in the same horizontal plane within ±3/32” (2.4 mm)
7	Stationary rail mounting points must be parallel within ±1/8” (3 mm)
8	Cable takeup support rail mounting points

Illustration 2-7: 2 Meter Bridge Specifications for a Typical 4.1 m (16 foot - 10 inch) Stationary Rail Mounting Interface (Both Rails Ceiling Mounted)

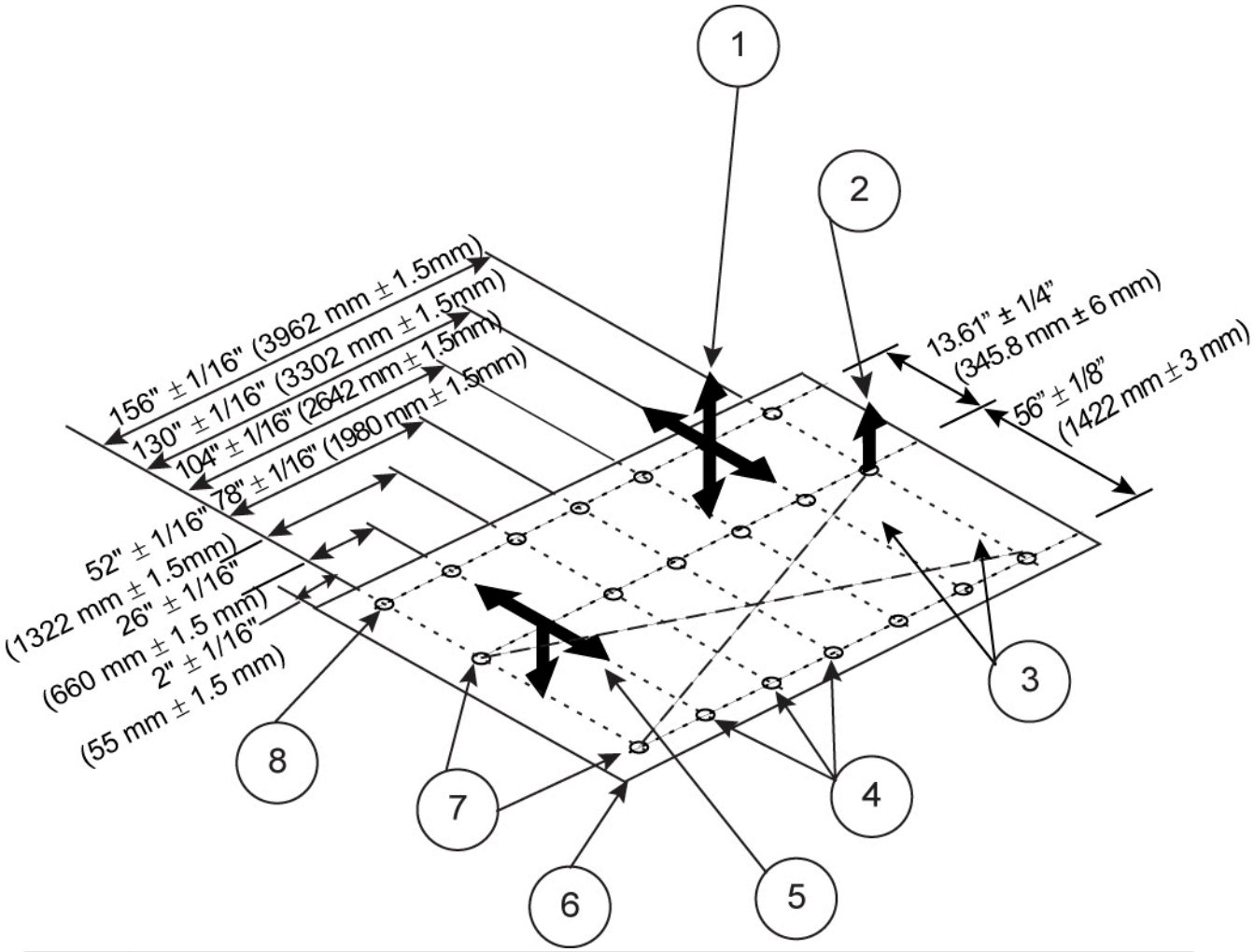

Item	Description
1	When a 50 lb. (22.7 kg) force is applied vertically upward, vertically downward, or horizontally at any support rail mounting point, the attachment interface must not deflect more than 1/16” (1.5 mm).
2	When a 100 lb. (45.4 kg) force is applied vertically upward at any stationary rail mounting point, the attachment interface MUST not deflect more than 1/16” (1.5 mm).
3	Diagonals must be equal within ±1/4” (6.5 mm).
4	All mounting points must be located on a common centerline within ±1/16” (1.5 mm).
5	When a 300 lb. (136 kg) load is applied vertically downward or horizontally at any stationary rail mounting point, the attachment interface MUST not deflect more than 1/16” (1.5 mm).
6	All mounting points must be in the same horizontal plane within ±3/32” (2.4 mm)
7	Stationary rail mounting points must be parallel within ±1/8” (3 mm)
8	Cable takeup support rail mounting points

Illustration 2-8: Suggested UNISTRUT Structure for OTS Suspension with 2 m Bridge

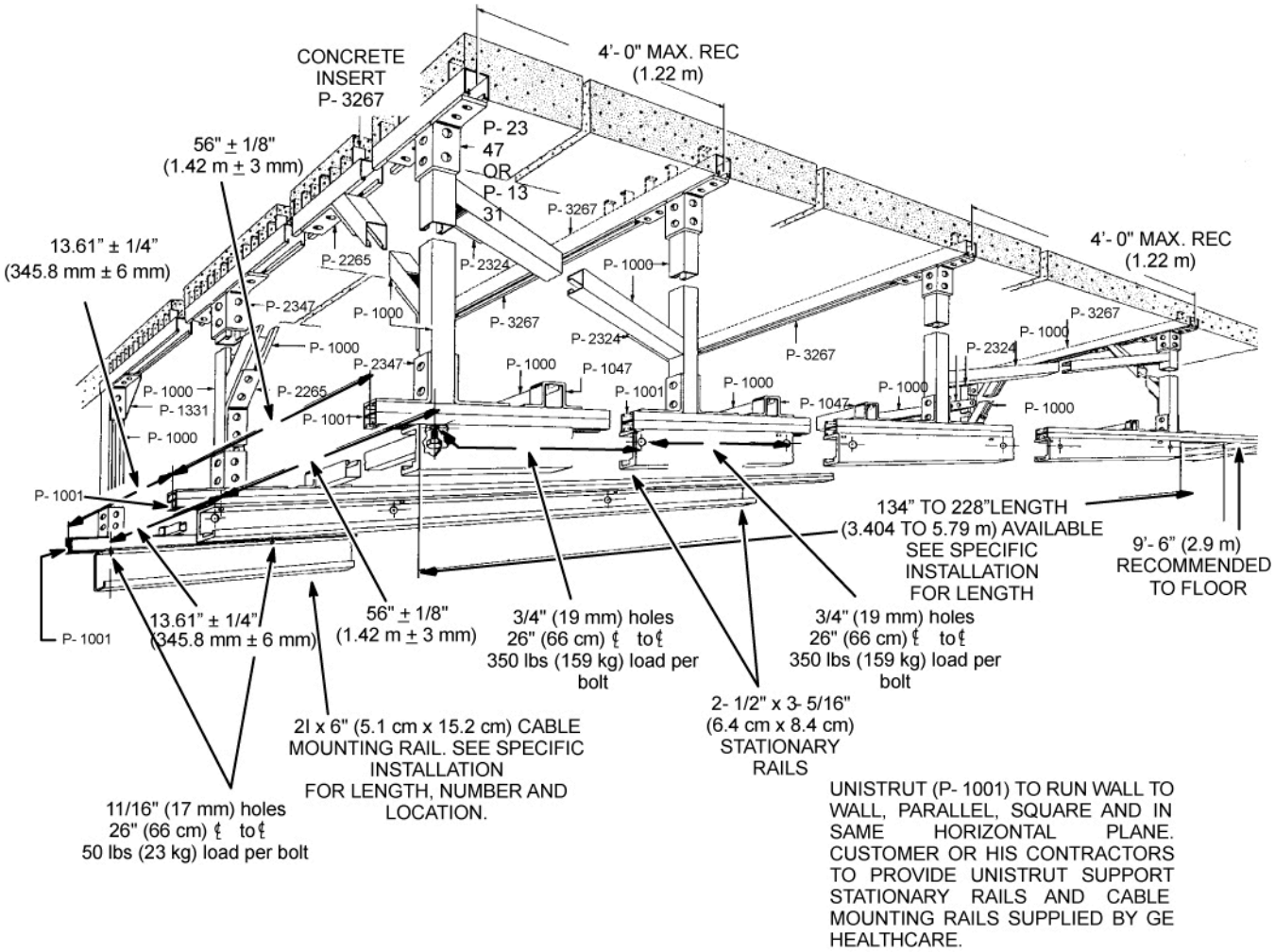

Illustration 2-9: Suggested UNISTRUT Structure for OTS Suspension with 3 m Bridge

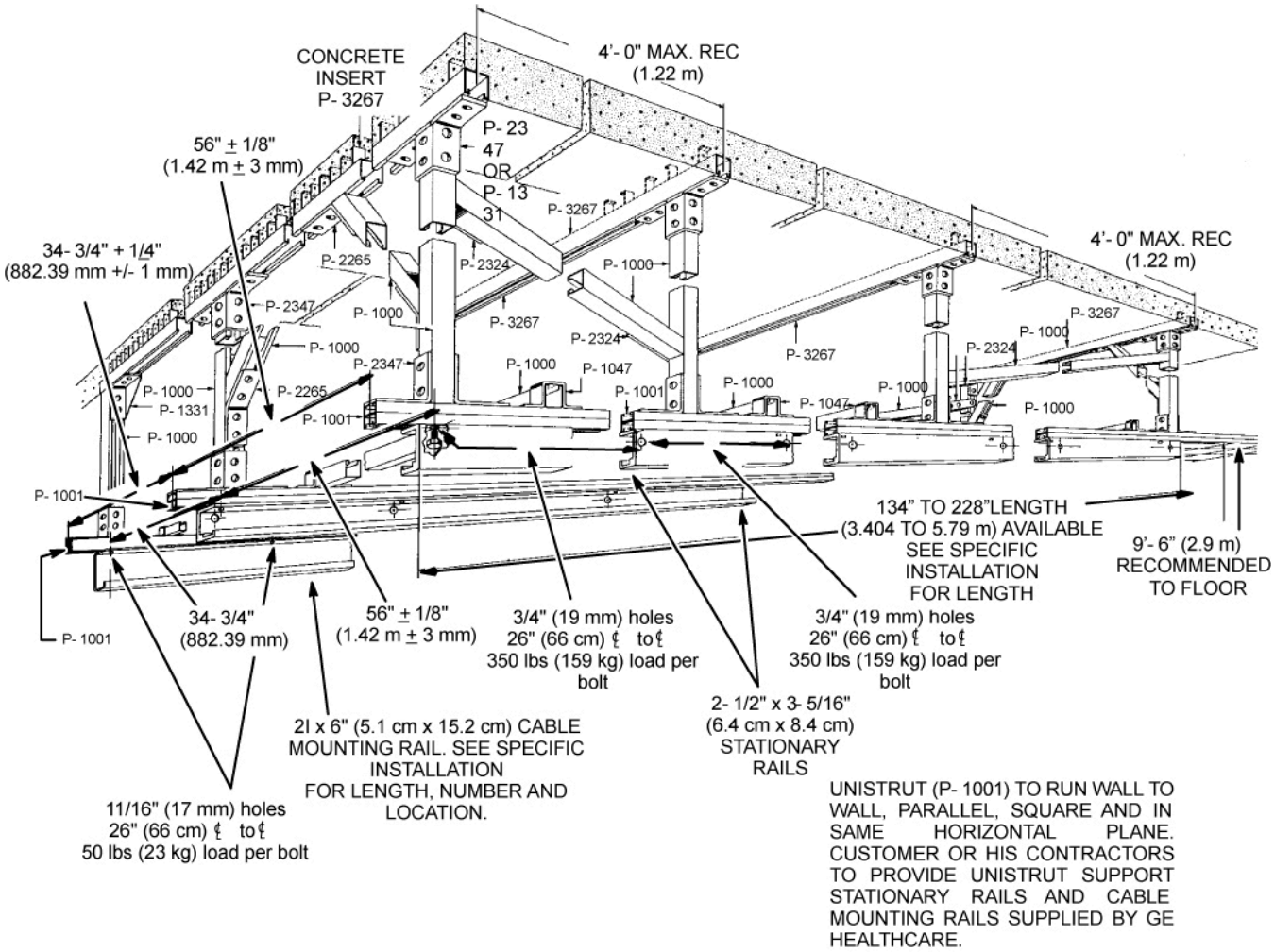

Illustration 2-10: Suggested UNISTRUT Structure for OTS Suspension with 4 m Bridge

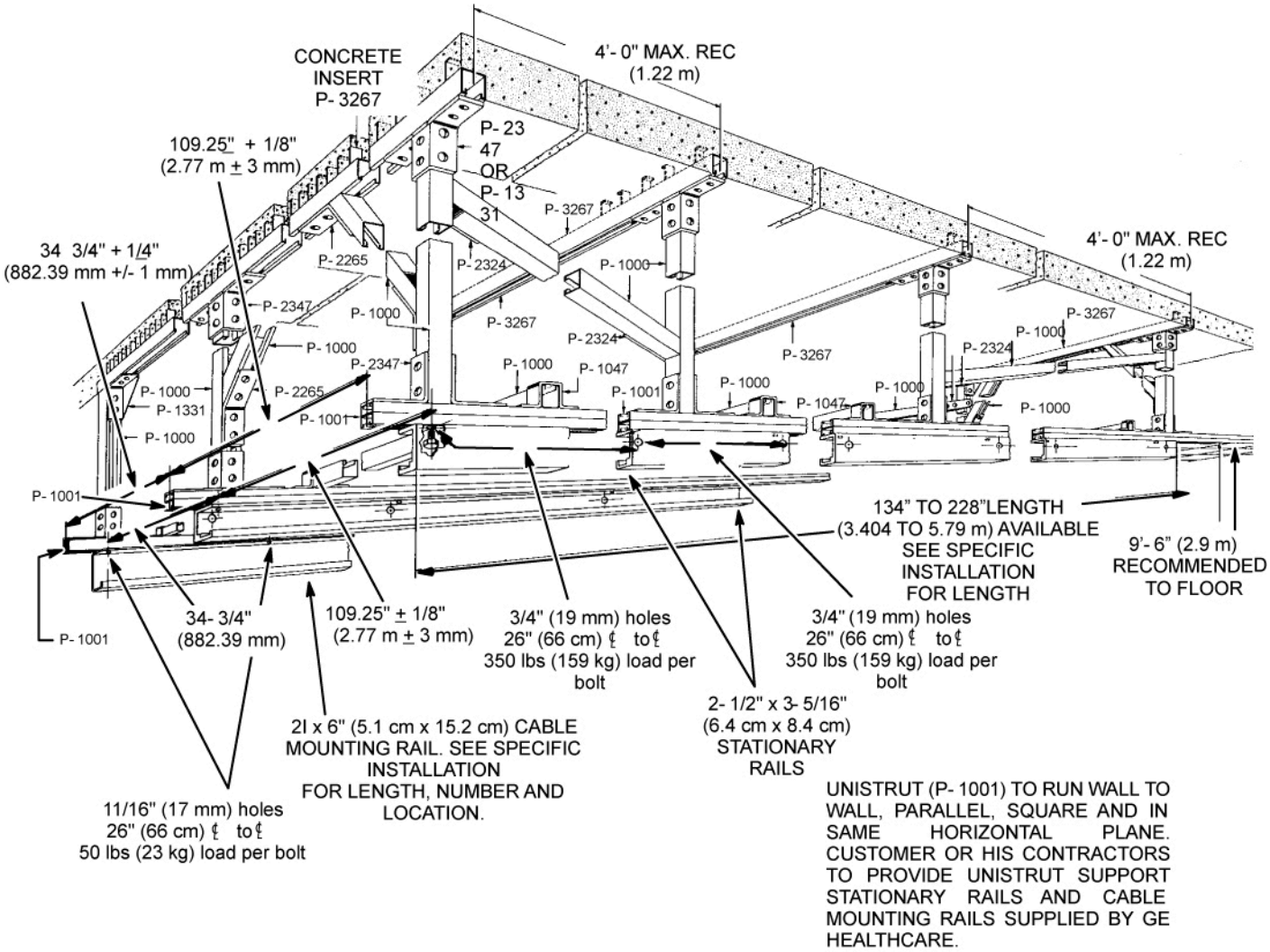

Illustration 2-11: Stationary Rail Mounting Locations and Clearances with 2M Bridge

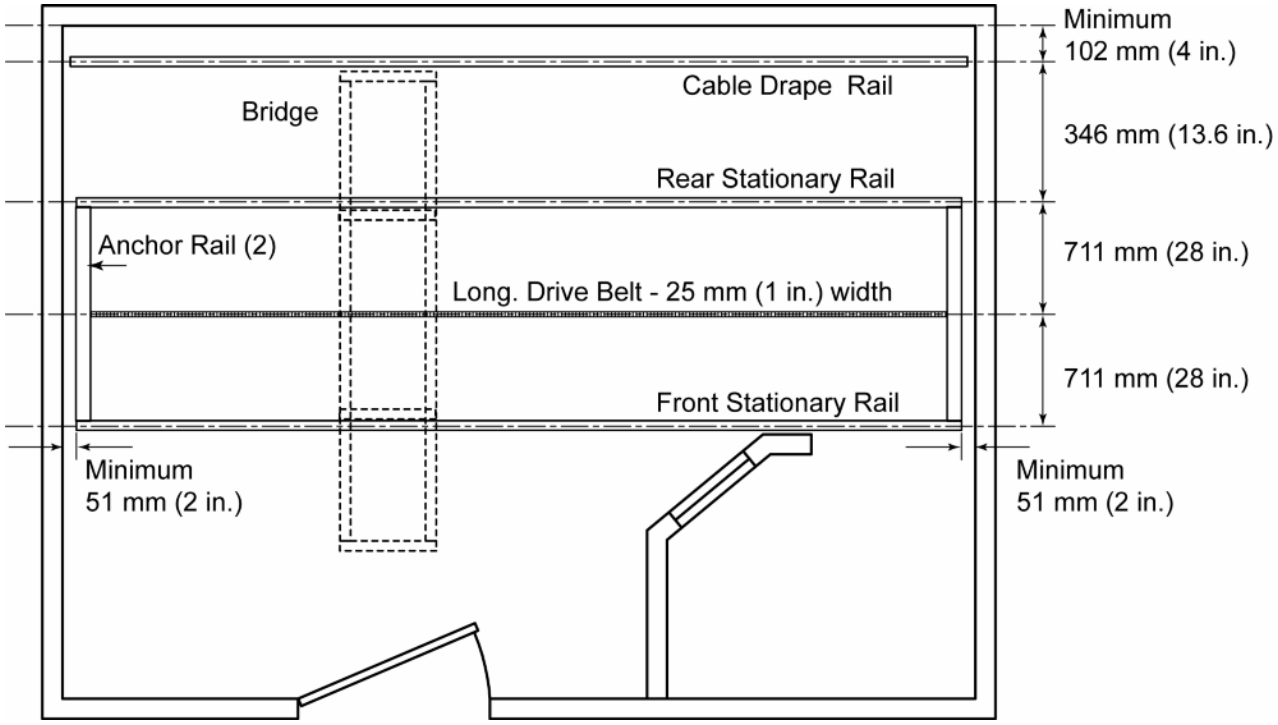

Illustration 2-12: Stationary Rail Mounting Locations and Clearances with 3M Bridge

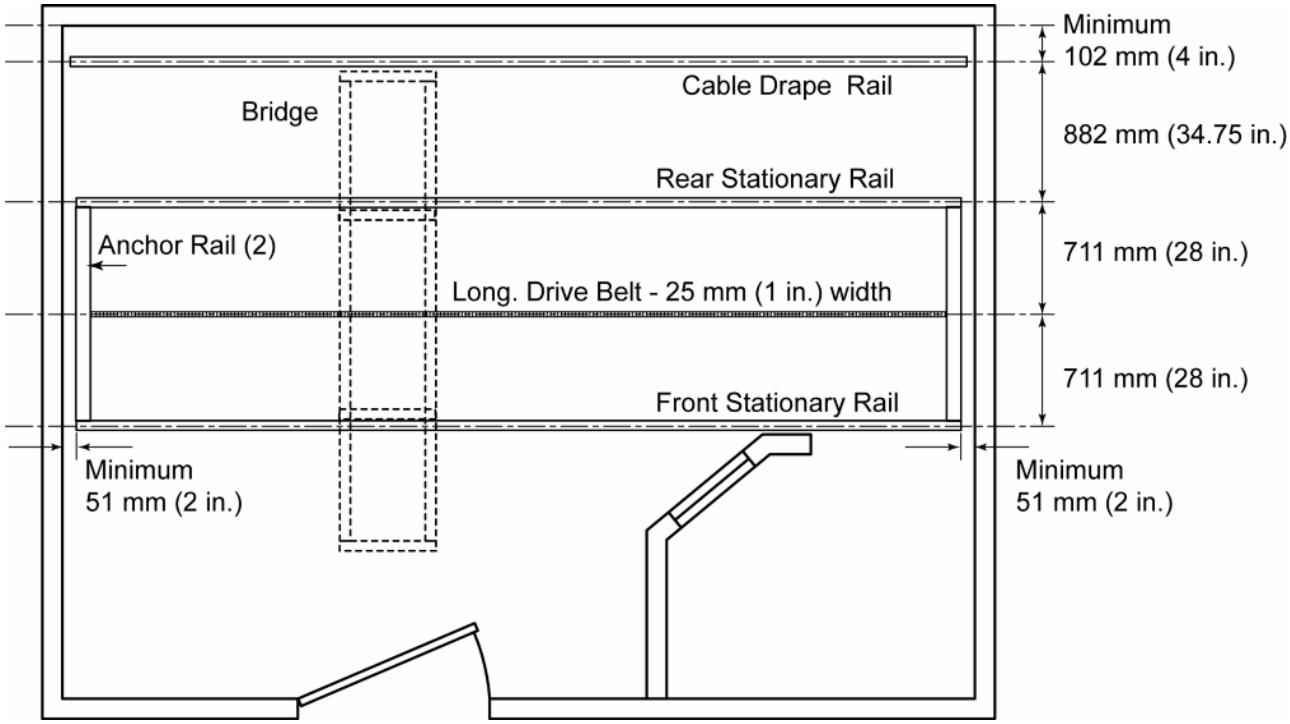

Illustration 2-13: Stationary Rail Mounting Locations and Clearances with 4M Bridge

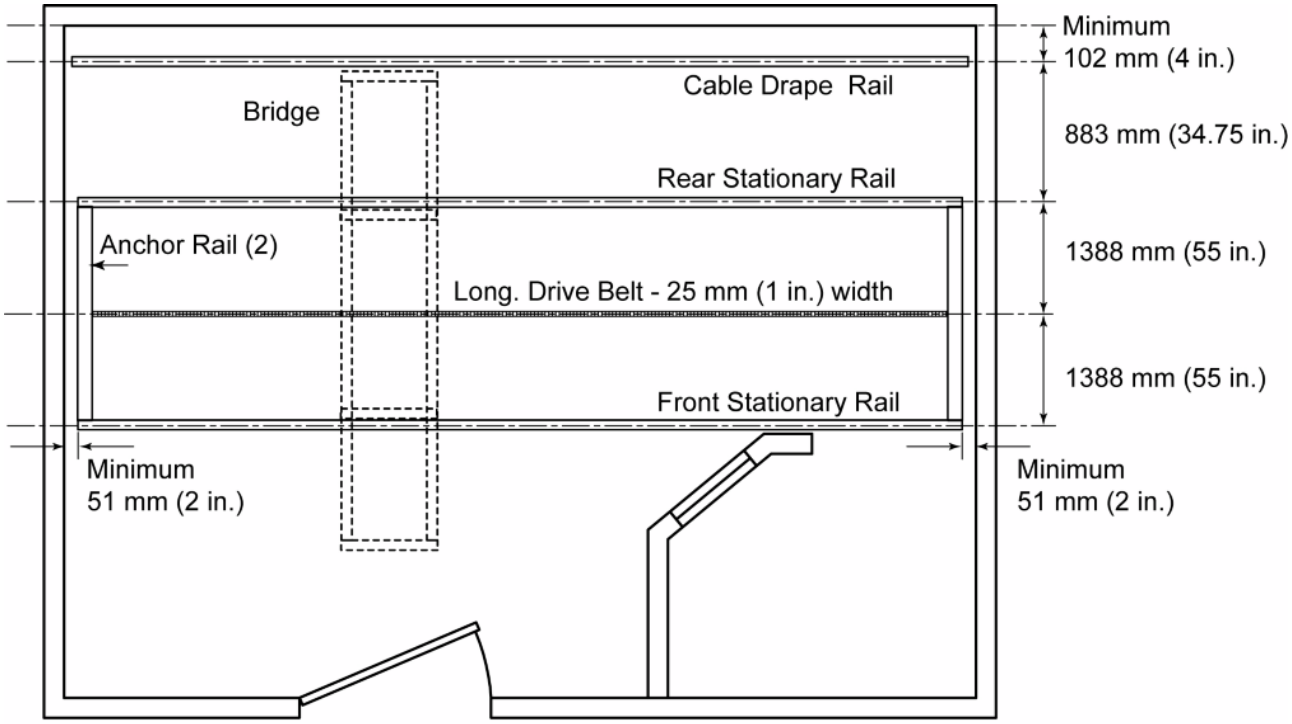

1.2.4 Wall Requirements

1.2.4.1 Grid Holder

Provide a wall space to hang the grid holder in the exam room, see Illustration 2-14. Expanding plastic sleeves are provided for the wall screws which are designed to expand into the drywall.

NOTE: The suggested height from the floor to the top of the grid holder assembly is approximately 30 inches (76 cm), depending upon hospital personnel preference. This means the top of the mounting panel should be 30 inches (76 cm) from the floor.

Illustration 2-14: Grid Holder Wall Panel

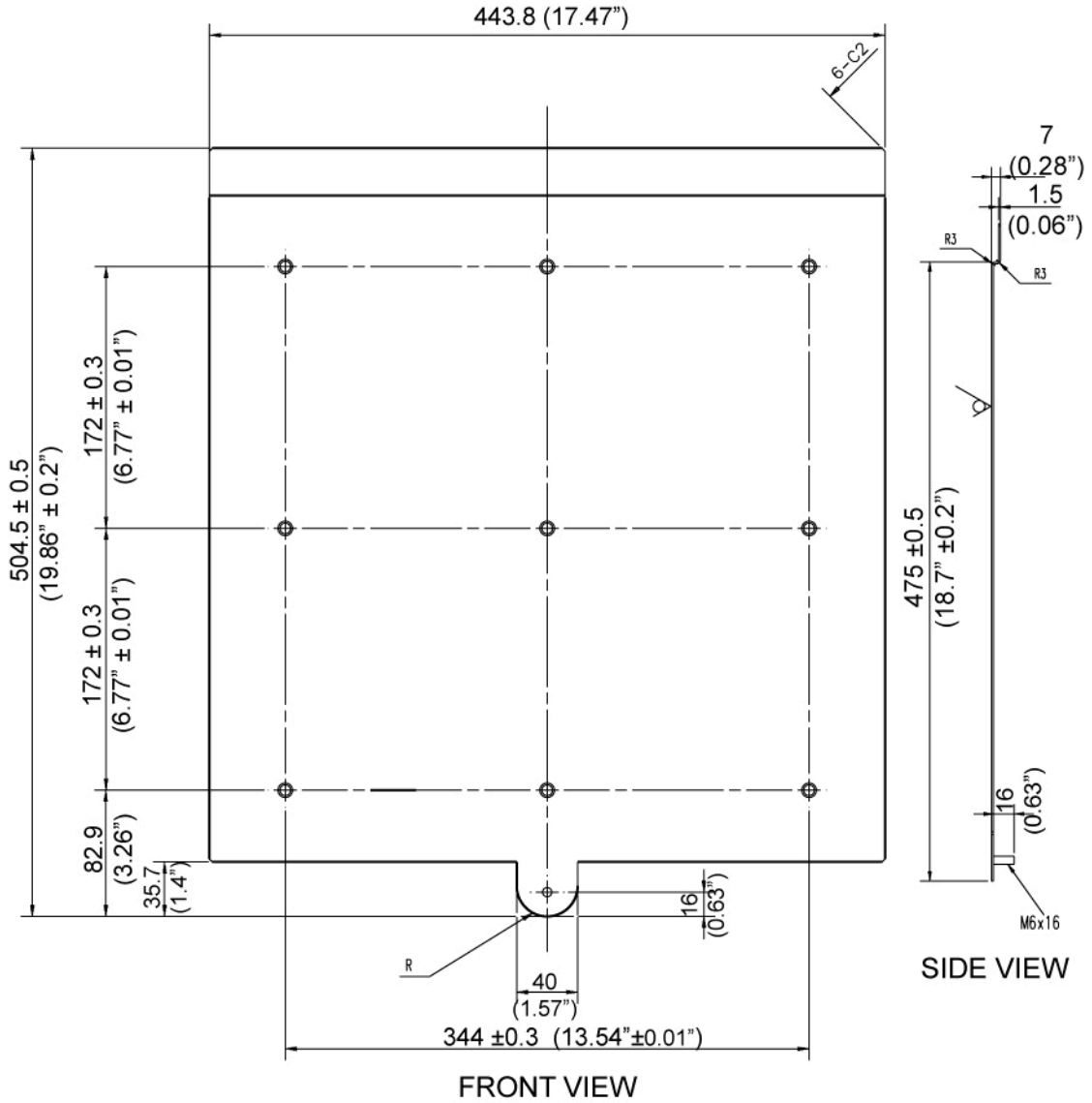

1.2.4.2 Support Rail for TRAD Detector

Illustration 2-15: TRAD Detector Support

Provide a wall space to hang the TRAD detector support rail (if applicable) in the exam room, see Illustration 2-16. Expanding plastic sleeves are provided for the wall screws which are designed to expand into the drywall.

- Rail must begin and end on studs!
- 48" rail must hit 4 studs for maximum weight capacity (max weight capacity not possible on 24" stud configuration). Also, use anchors every 8" between studs.
- The rail should start in the middle of the first stud and end in the middle of the last stud.
- If rail does not end on a stud, new top and bottom holes will need to be drilled at the last available stud. Then, from the center of the last stud, drill new top holes every 4" in remaining section of the rail for additional anchor support.

NOTE: The suggested height from the floor to the support rail is approximately 48 inches (122 cm), depending upon hospital personnel preference.

Illustration 2-16: Support Rail for TRAD Detector

48” Rail Mounting - 16” Studs

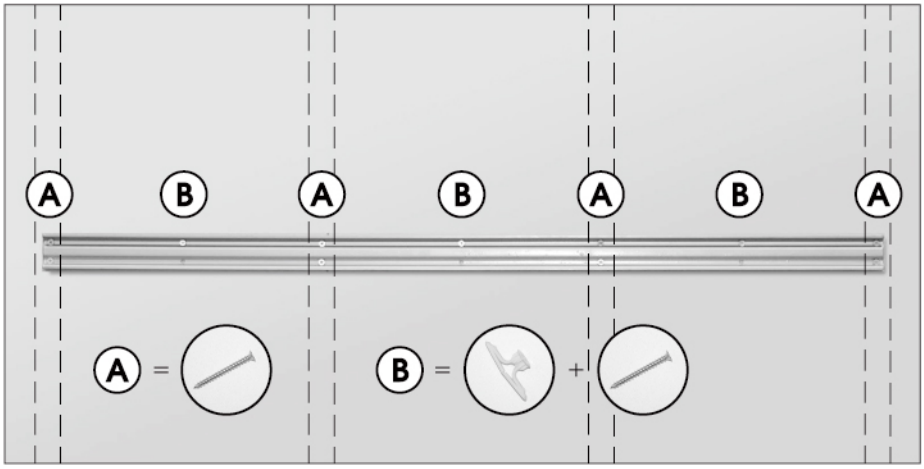

48” Rail Mounting - 24” Studs

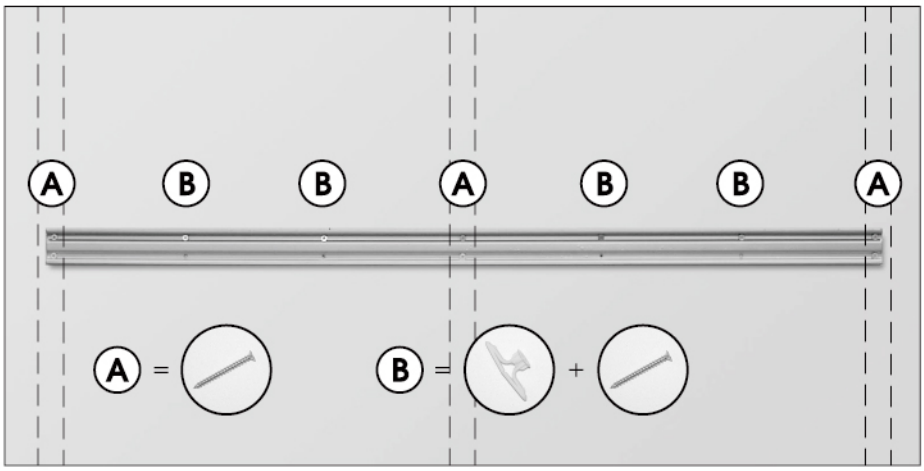

2 System Component Dimensions and Weights

2.1 Dimensions

Table 2-3: Product Physical Characteristics (Width / Depth / Height)

PRODUCT OR COMPONENT	DIMENSIONS			References
	Width	Depth	Height	
Operator Console: PC Tower xw6400	165 mm (6.5 in)	440 mm (17.32 in)	440.7 mm (17. in)	
PC Tower xw8600	210 mm (8.3 in)	525 mm (20.7 in)	455 mm (17.9 in)	
LCD Monitor	387 mm (15.2 in)	180 mm (7.1 in)	504 mm (19.9 in)	
RCIM	451 mm (17.8 in)	135 mm (5.3 in)	70 mm (2.8 in)	
Digital Table Assembly	2250 mm (88.6 in)	938 mm (36.92 in)	575 - 820 mm (22.64 - 32.28 in)	See Illustration 2-17
Stretchers (optional):				
Non-elevating	2150 mm (84.7 in)	870 mm (34.25 in)	705 mm (27.75 in)	See Illustration 2-33
Non-elevating (carbon fiber)	2200 mm (86.6 in)	650 mm (25.5 in)	700 mm (27.5 in)	See Illustration 2-34
Elevating	2437 mm (96 in)	895 mm (35.24 in)	1010 mm (39.76 in) max.	See Illustration 2-35
Stationary Rail (each)	5.79 m (19 ft)	62.3 mm (2.45 in)	84.3 mm (3.32 in)	See Illustration 2-22 through Illustration 2-30
2 Meter Bridge	2122 mm (83.6 in)	655 mm (25.8 in)	158.7 mm (6.25 in)	
3 Meter Bridge	3060 mm (120.5 in)	655 mm (25.8 in)	158.7 mm (6.25 in)	
4 Meter Bridge	4387.5 mm (172.8 in)	667.8 mm (26.29 in)	163 mm (6.4 in)	
Overhead Tube Support Includes: carriage, collimator, tube, and UIF	607 mm (23.89 in)	1016 mm (40 in)	889 mm (35 in)	
System Cabinet	907 mm (35.7 in)	748 mm (29.5 in)	1296 mm (51 in)	See Illustration 2-18 through Illustration 2-20
Grid Holder	511.8 mm (20.15 in)	202.4 mm (7.97 in)	504.5 mm (19.86 in)	See Illustration 2-21
Wall Stand	696 - 1276 mm (27.4 - 50.2 in) or 1890 mm (74.4 in) with patient support bar at sides	936 - 1346 mm (36.9 - 503 in)	2310 - 2662 mm (90.94 - 104.8 in)	See Illustration 2-31 and Illustration 2-32
Extended Wall Stand (EXT WS)	696 - 1276 mm (27.4 - 50.2 in) or 1890 mm (74.4 in) with patient support bar at sides	1260 - 1670 mm (49.6 - 65.8 in)	2310 - 2662 mm (90.94 - 104.8 in)	See Illustration 2-31 and Illustration 2-32
Weight Bearing Rolling Stand (option)	1372 mm (54 in)	819mm (32 in)	1534 mm (60.4)	See Illustration 2-38
Image Pasting Barrier with Footstool (option)	1084 mm (42.7 in)	737 mm (29 in)	2060 mm (81.1 in)	See Illustration 2-36 and Illustration 2-37

PRODUCT OR COMPONENT	DIMENSIONS			References
	Width	Depth	Height	

2.2 Table

Illustration 2-17: Table Views

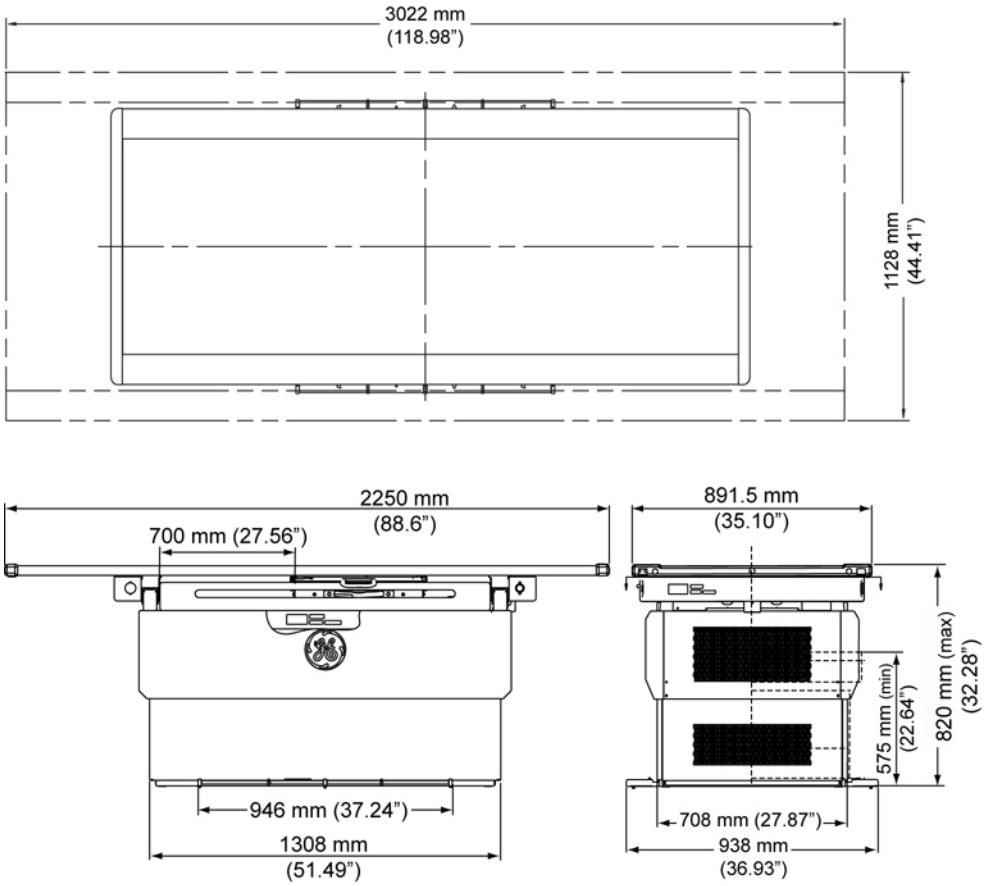

2.3 System Cabinet

Illustration 2-18: System Cabinet Dimensions (Front, Bottom, Back)

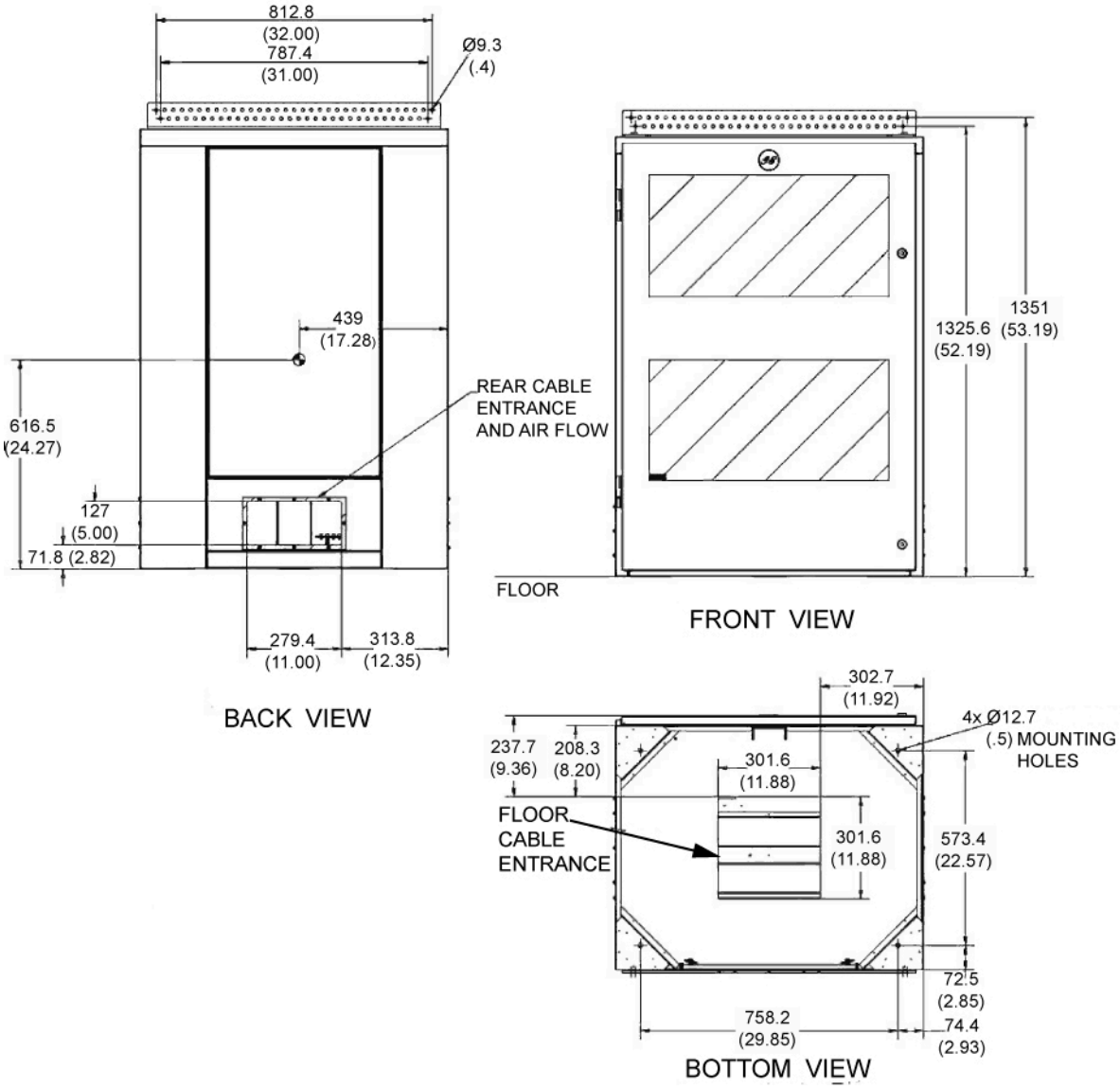

Illustration 2-19: System Cabinet Dimensions (Front, Top, Right)

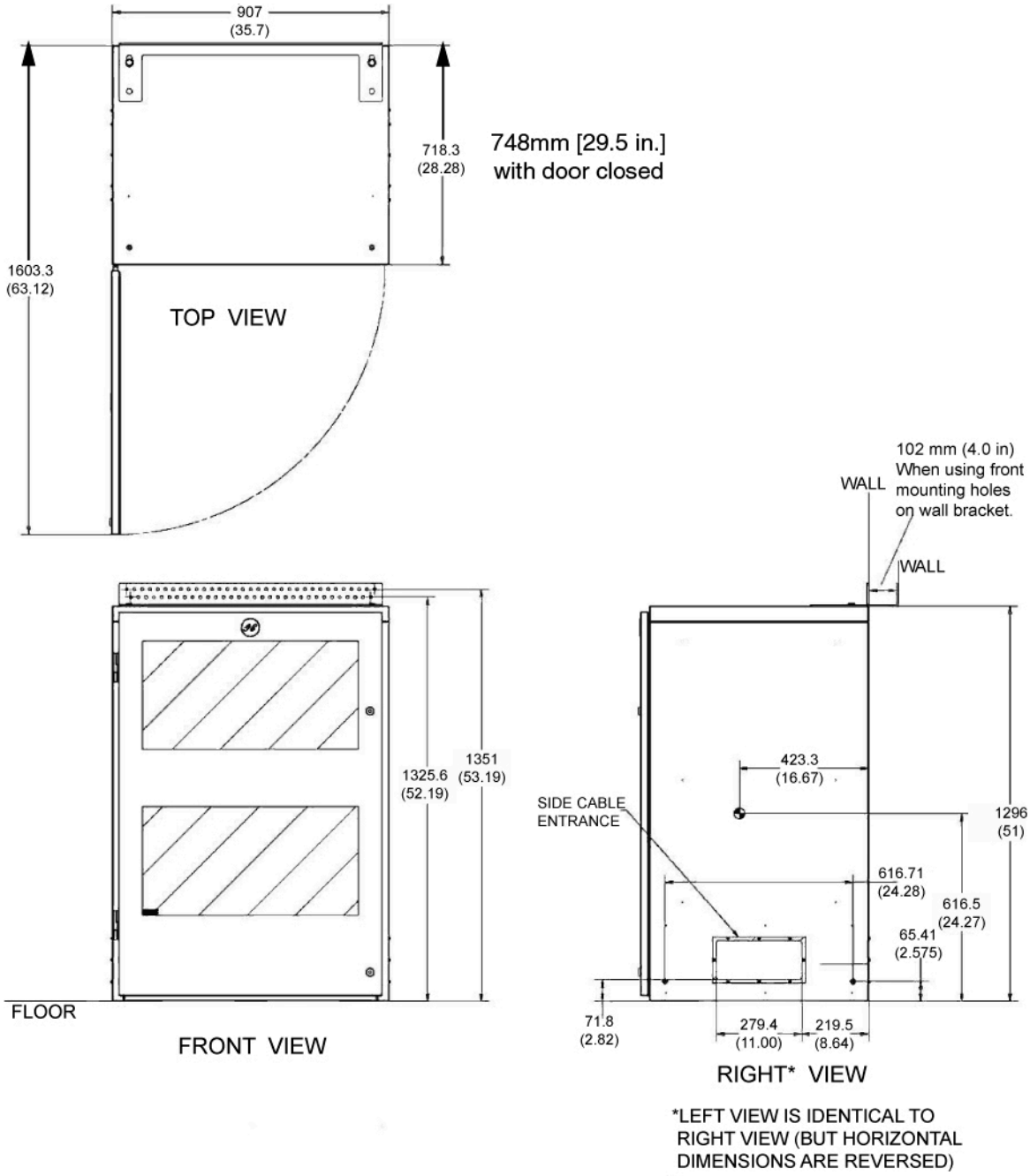

Illustration 2-20: System Cabinet Wall-Mount Bracket

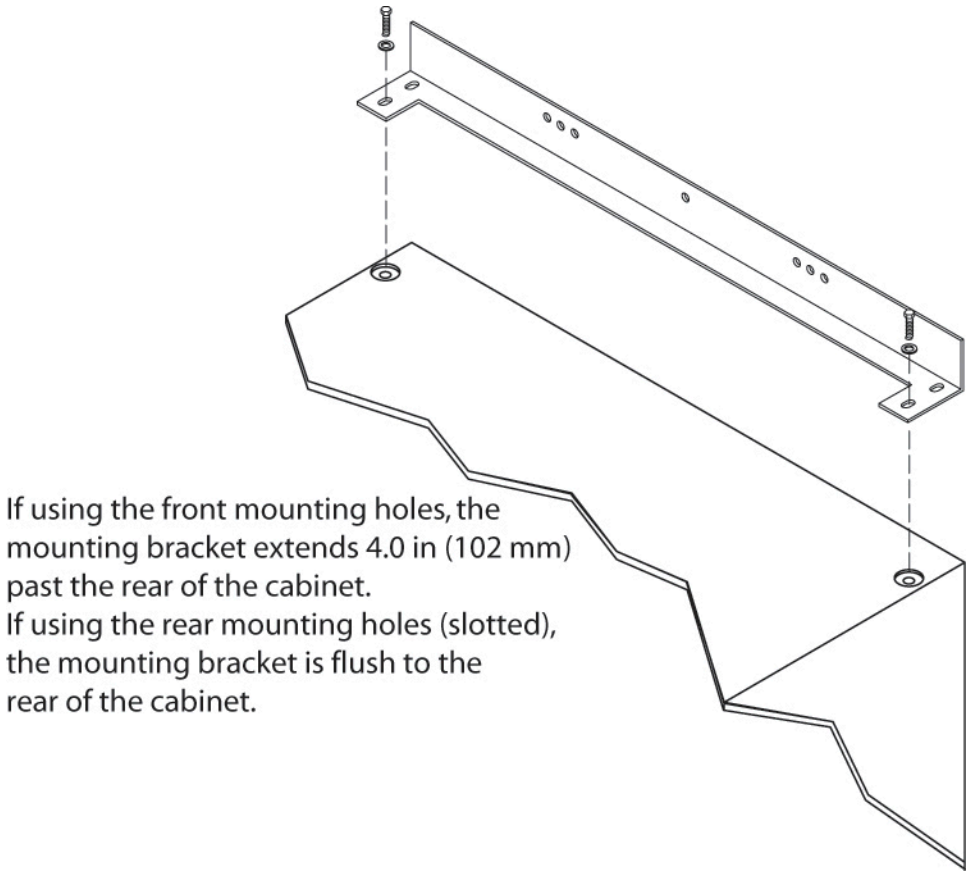

2.4 Grid Holder

Illustration 2-21: Grid Holder Dimensions

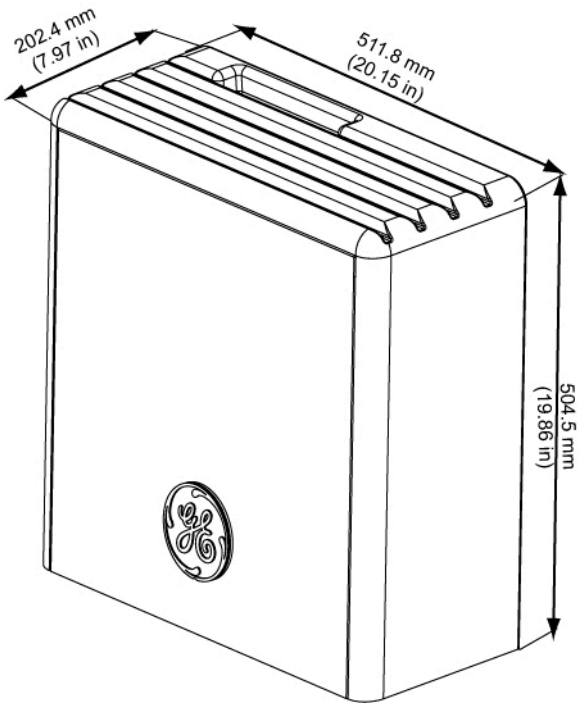

2.5 Over-Head Tube Support (OTS)

The OTS comprises a system for suspending and supporting an X-ray tube unit and collimator. It employs a spring counterpoise mechanism to balance these loads. The OTS's main components are the stationary rails, the bridge and the support column.

Illustration 2-22: OTS Suspension

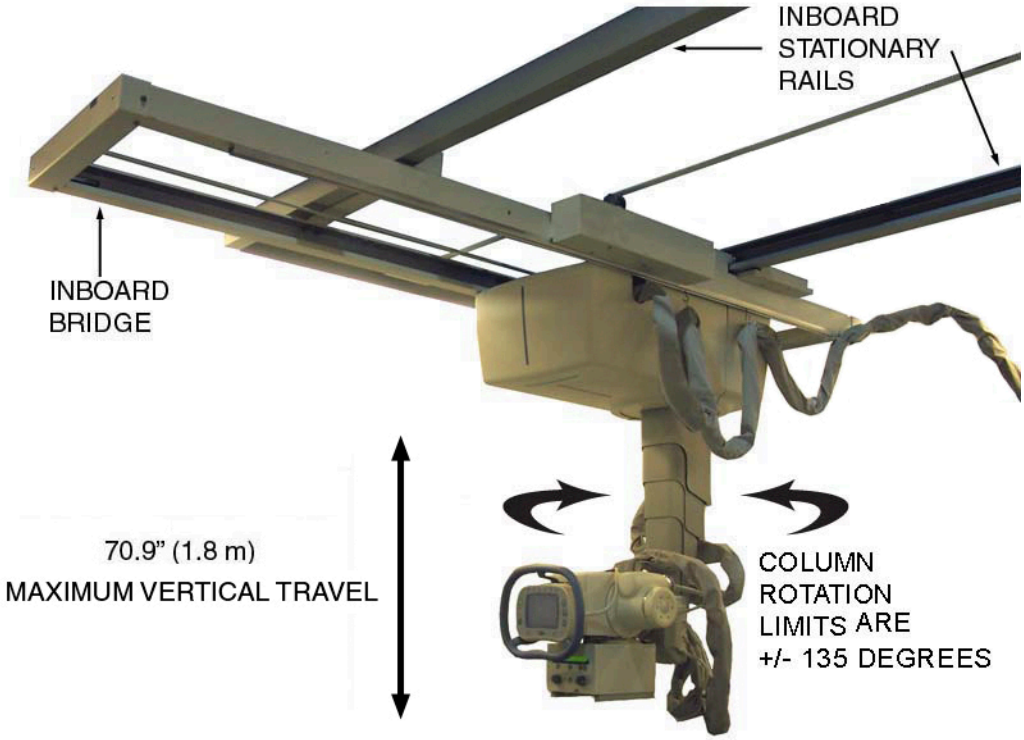

Illustration 2-23: OTS Dimensions

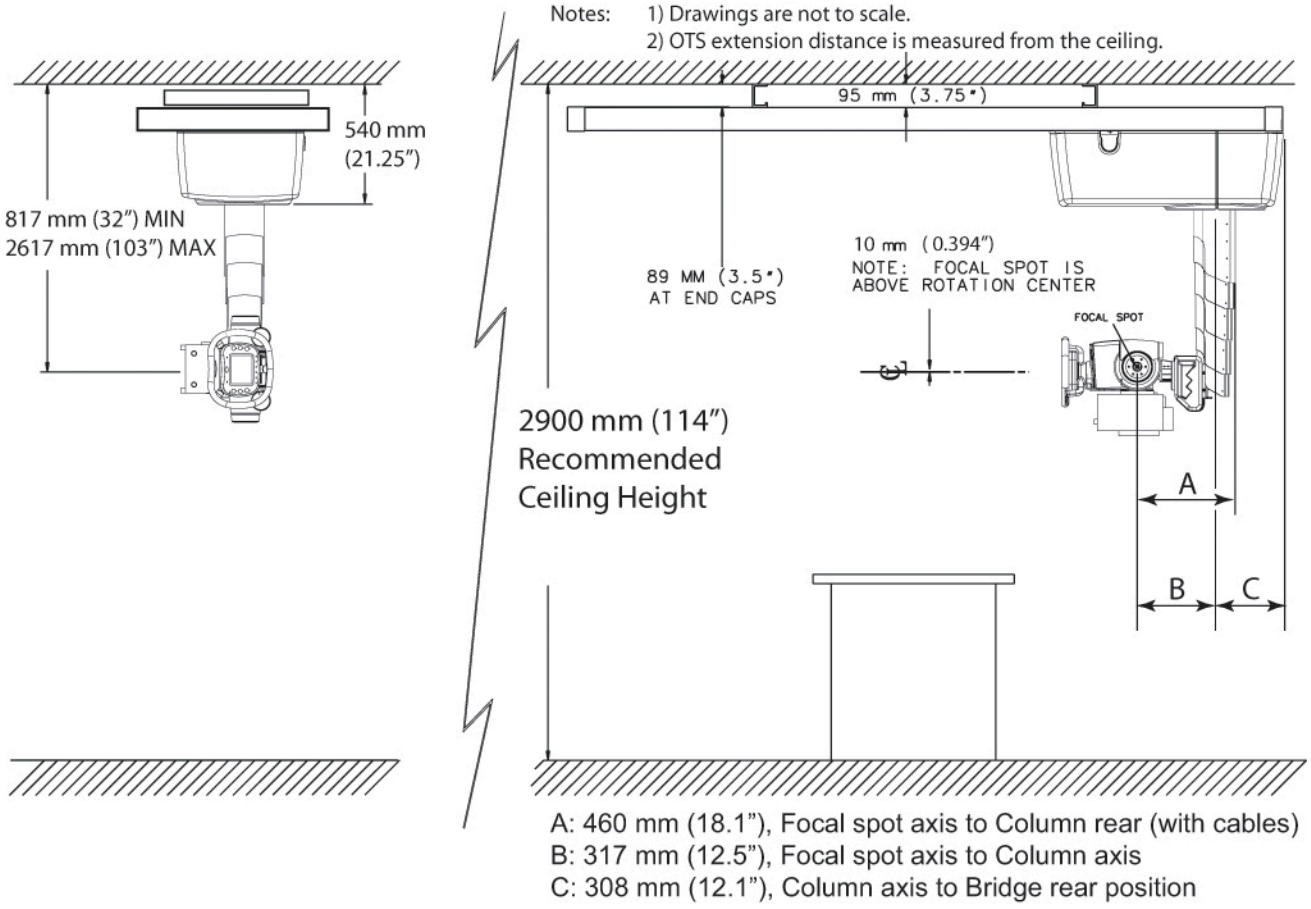

Illustration 2-24: OTS Suspension Side View (Refer to Table 2-4)

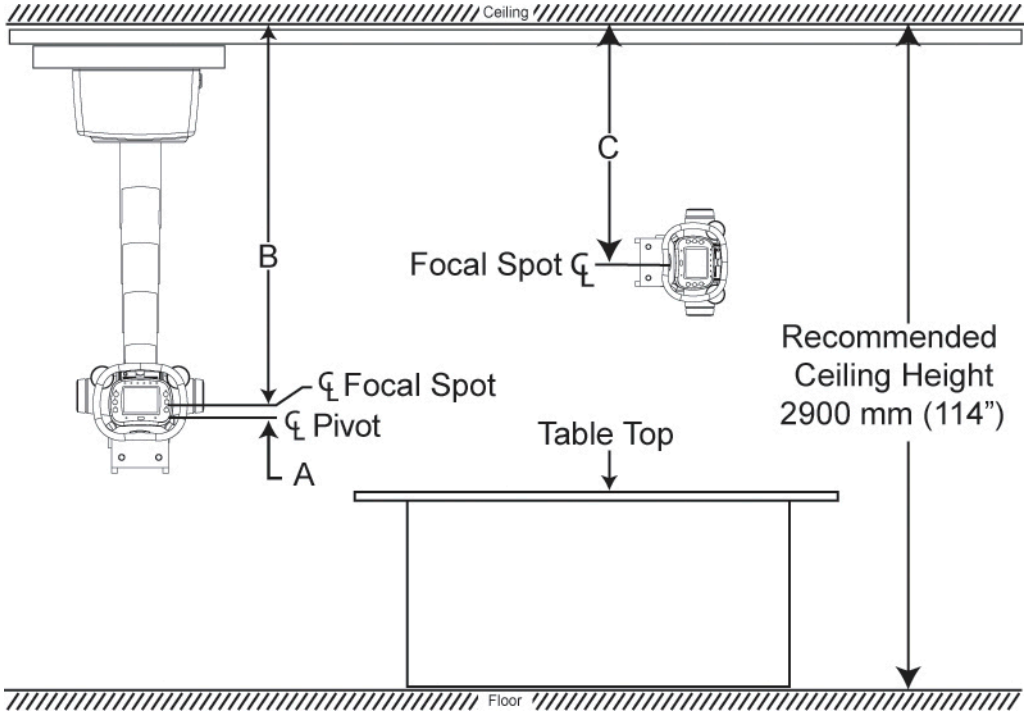

Table 2-4: OTS Suspension Vertical Travel Limits (See Illustration 2-24)

TRAVEL LOCATION	DIMENSIONS WITH THE MAXIRAY 100 TUBE UNIT	MIN.	MAX.
A	FOCAL SPOT ABOVE TUBE PIVOT POINT	10 mm (0.394 in)	----------
B	COLLIMATOR POINTED DOWN (VERTICAL)	807 mm (31.77 in)	2607 mm (102.64 in)
C	COLLIMATOR POINTED SIDEWAYS (HORIZONTAL)	817 mm (32.17 in)	2617 mm (103.03)

Illustration 2-25: 2M Focal Spot Travel - Tube at 0 Degrees

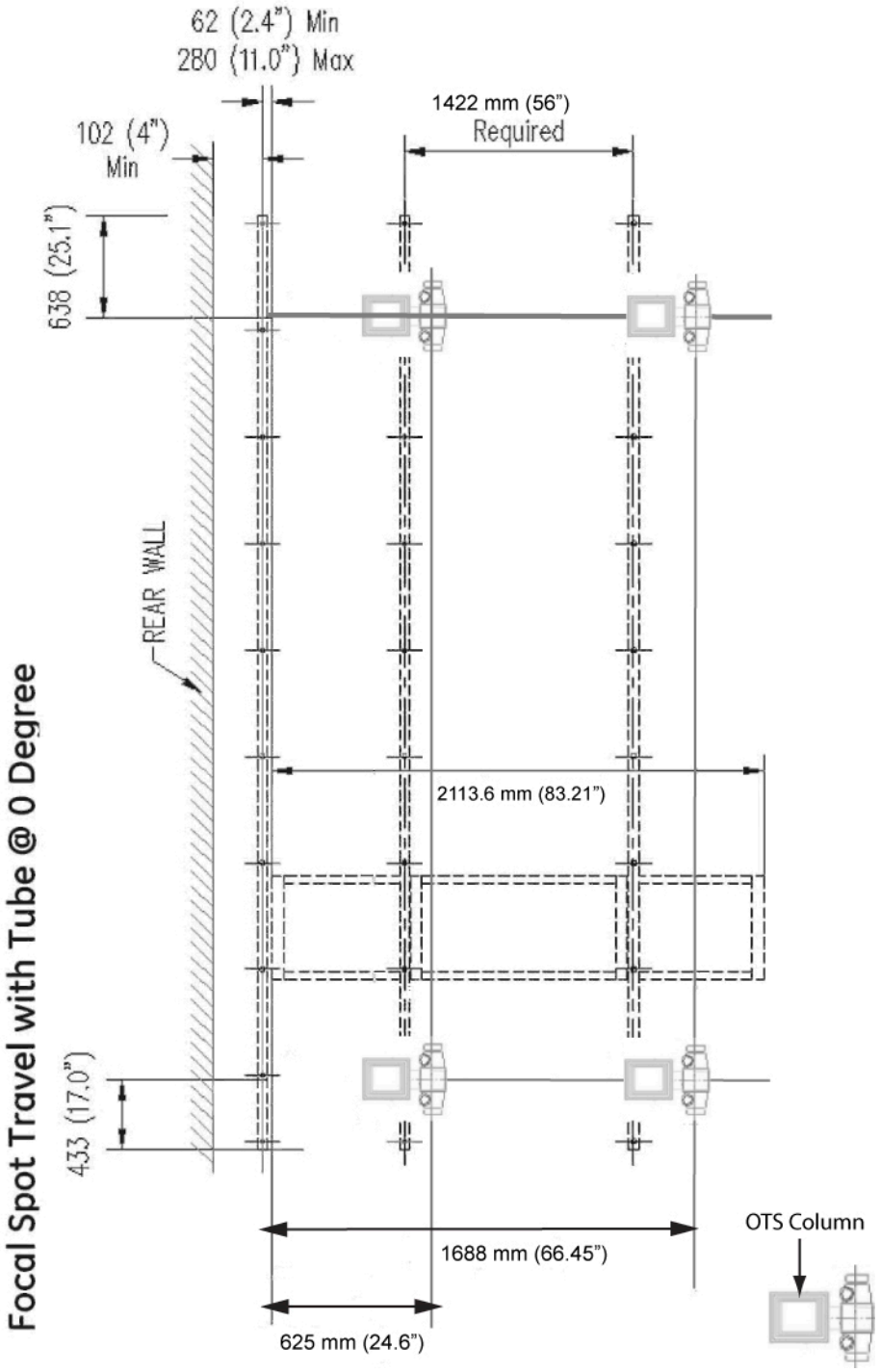

Illustration 2-26: 2M Focal Spot Travel - Tube at 90 Degrees

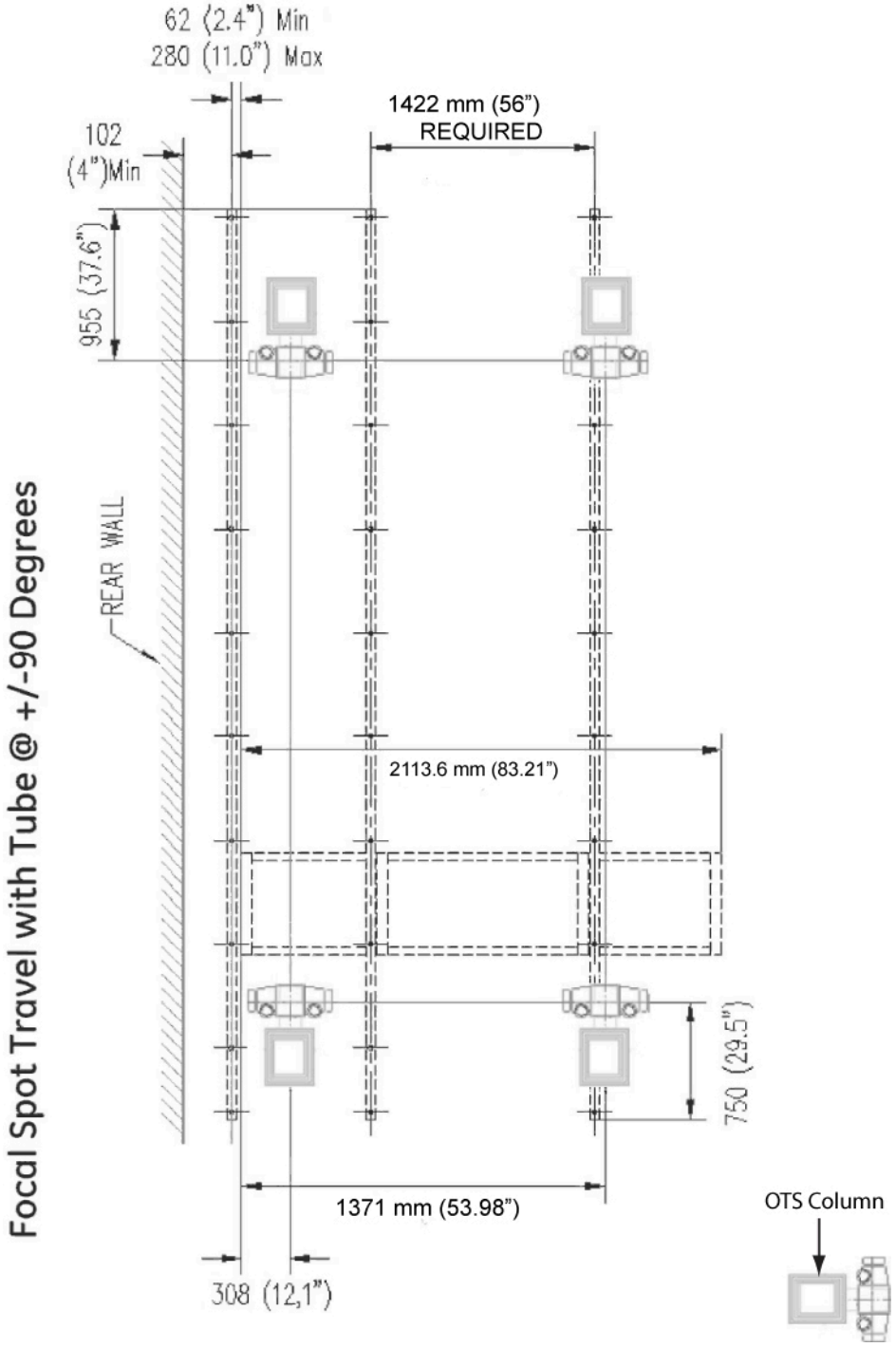

Illustration 2-27: 3M Focal Spot Travel - Tube at 0 Degrees

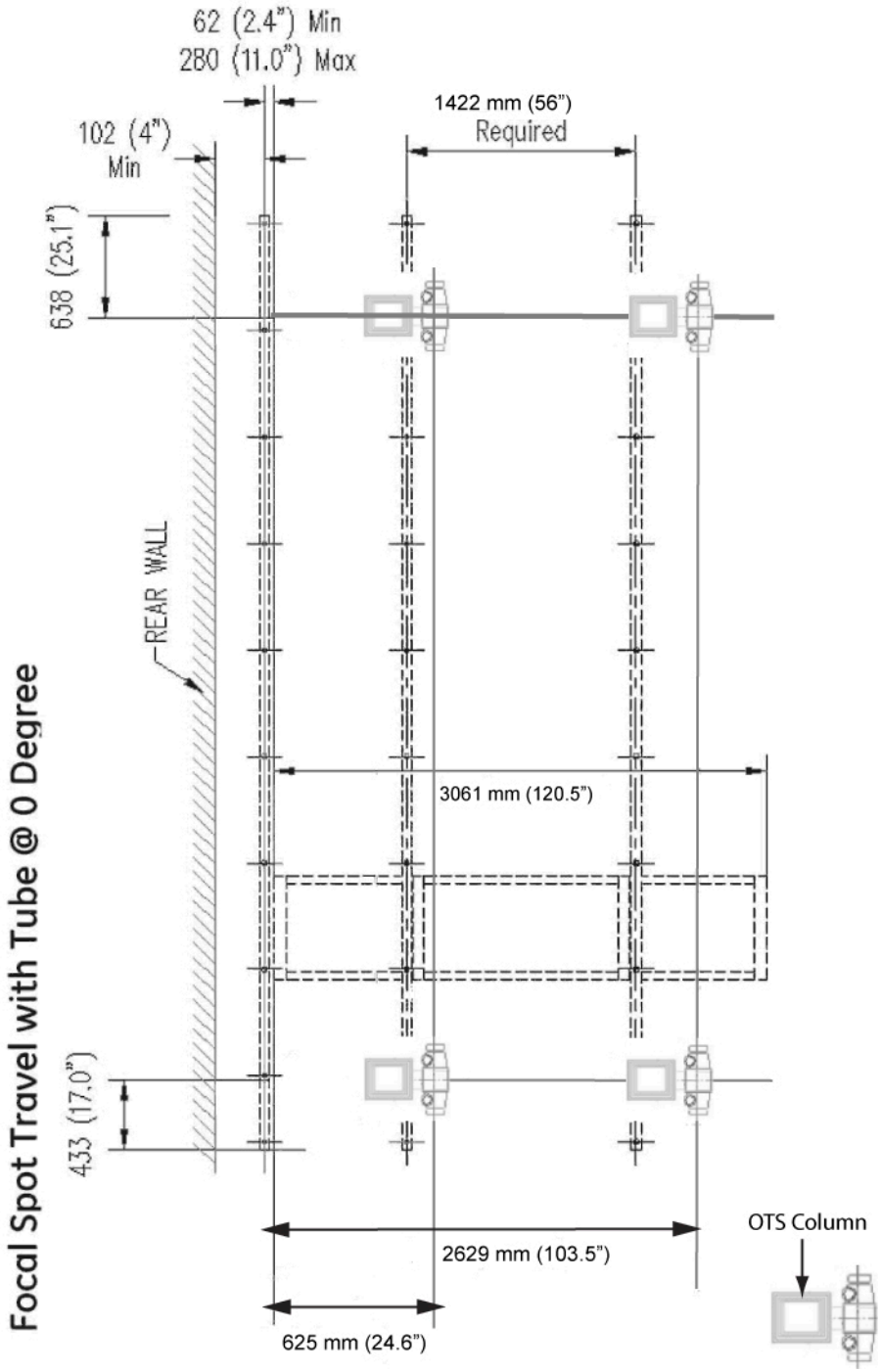

Illustration 2-28: 3M Focal Spot Travel - Tube at 90 Degrees

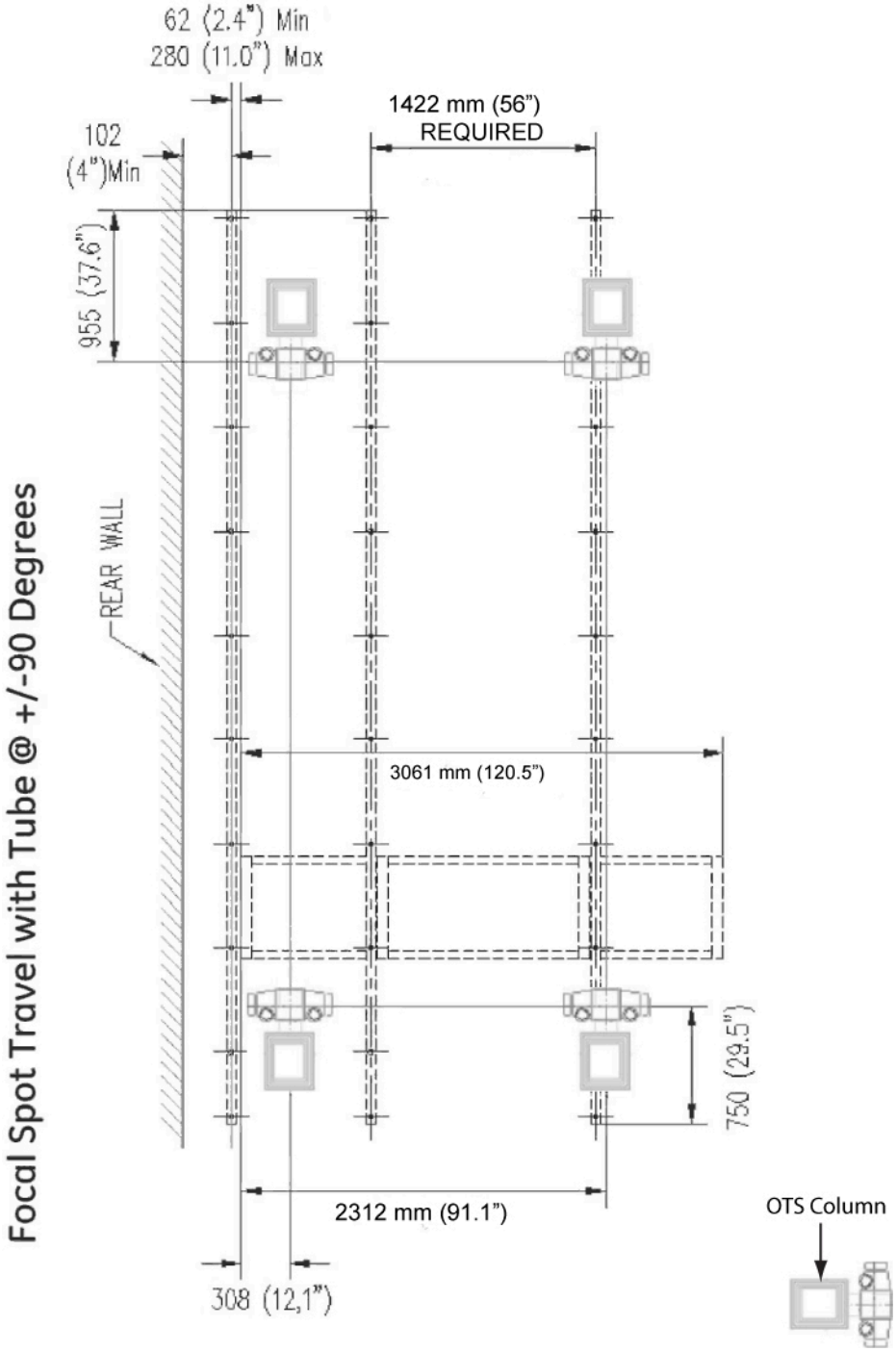

Illustration 2-29: 4M Focal Spot Travel - Tube at 0 Degrees

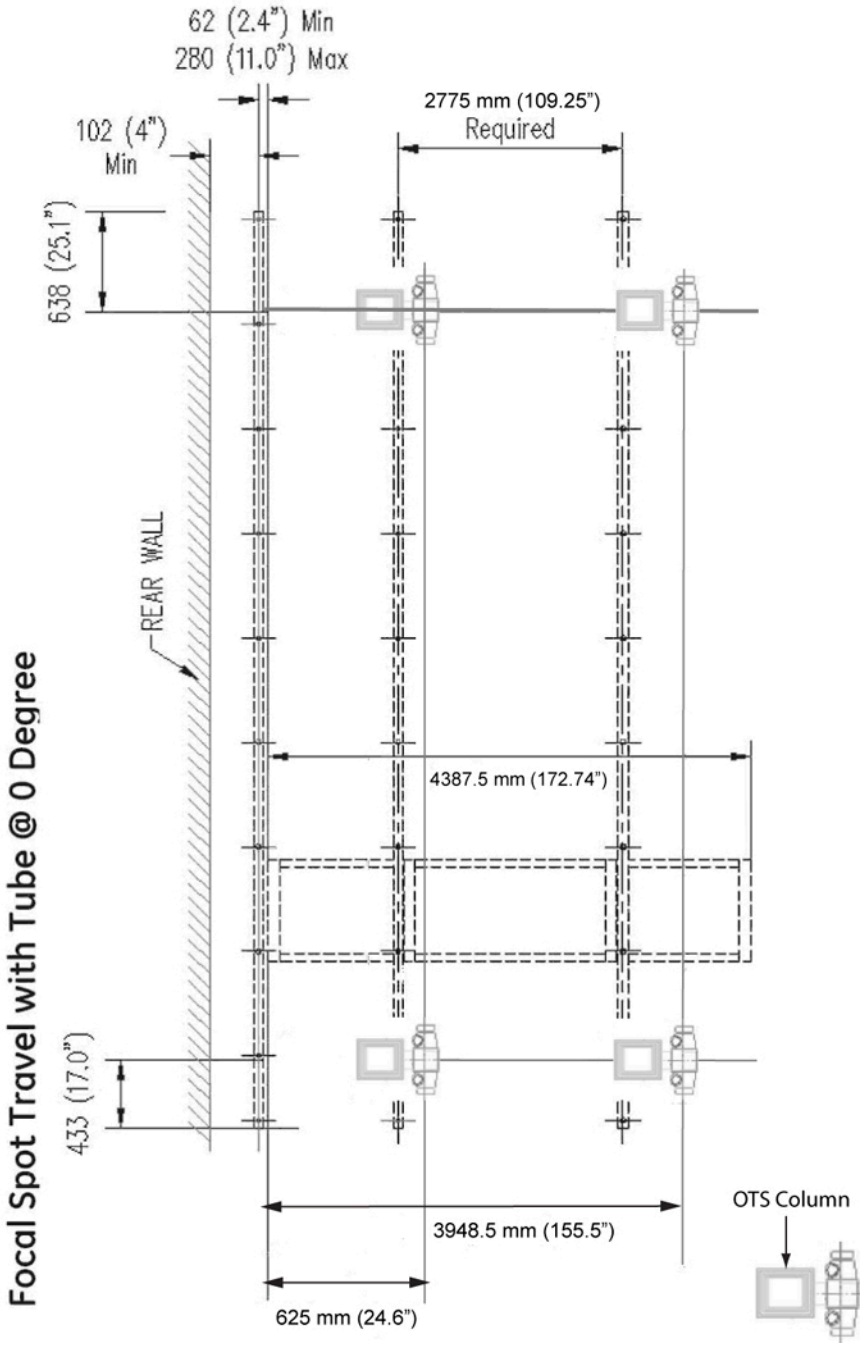

Illustration 2-30: 4M Focal Spot Travel - Tube at 90 Degrees

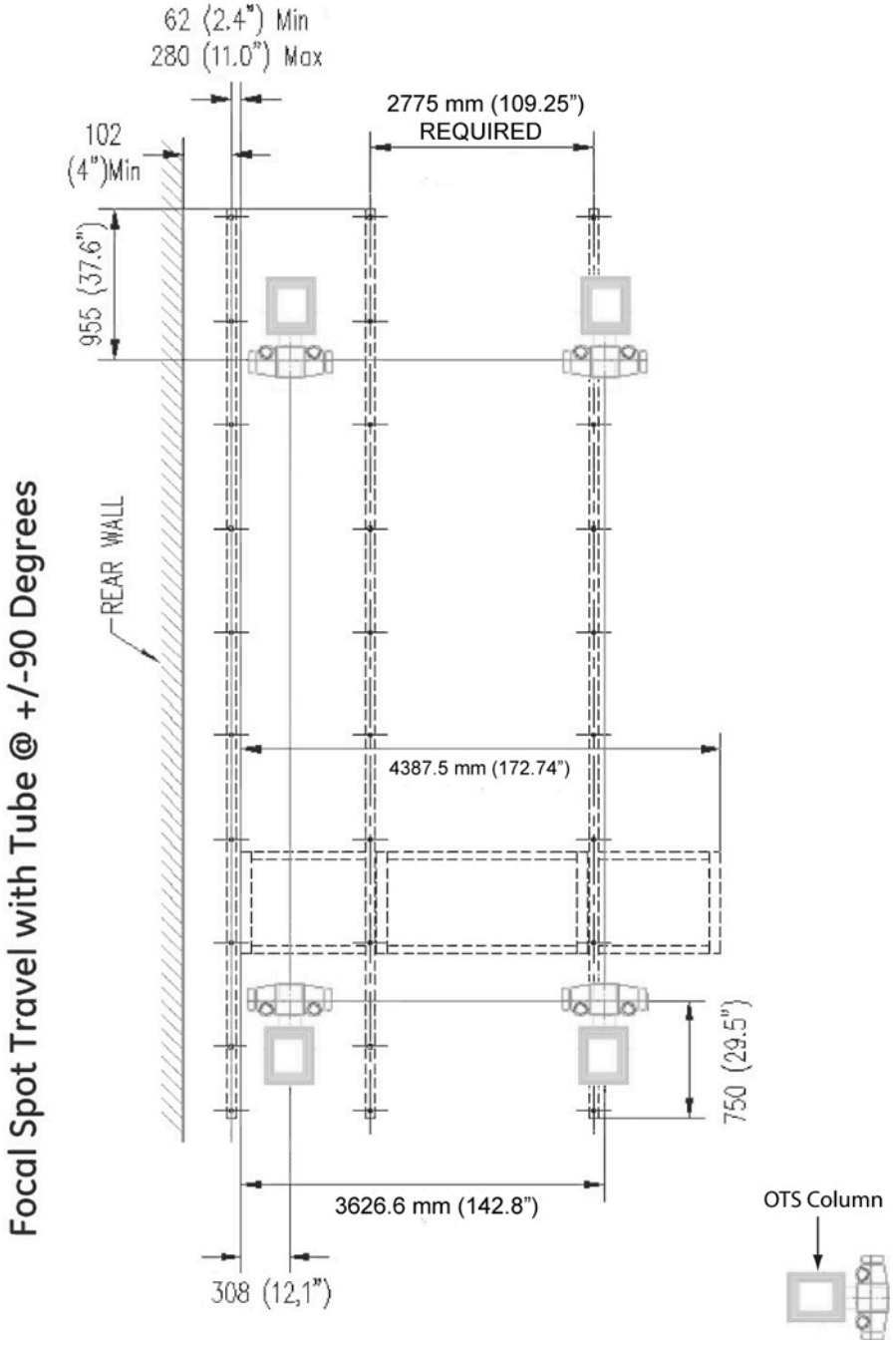

2.6 Wall Stands

Illustration 2-31: Wall Stand Dimensions (0 and 90 degrees)

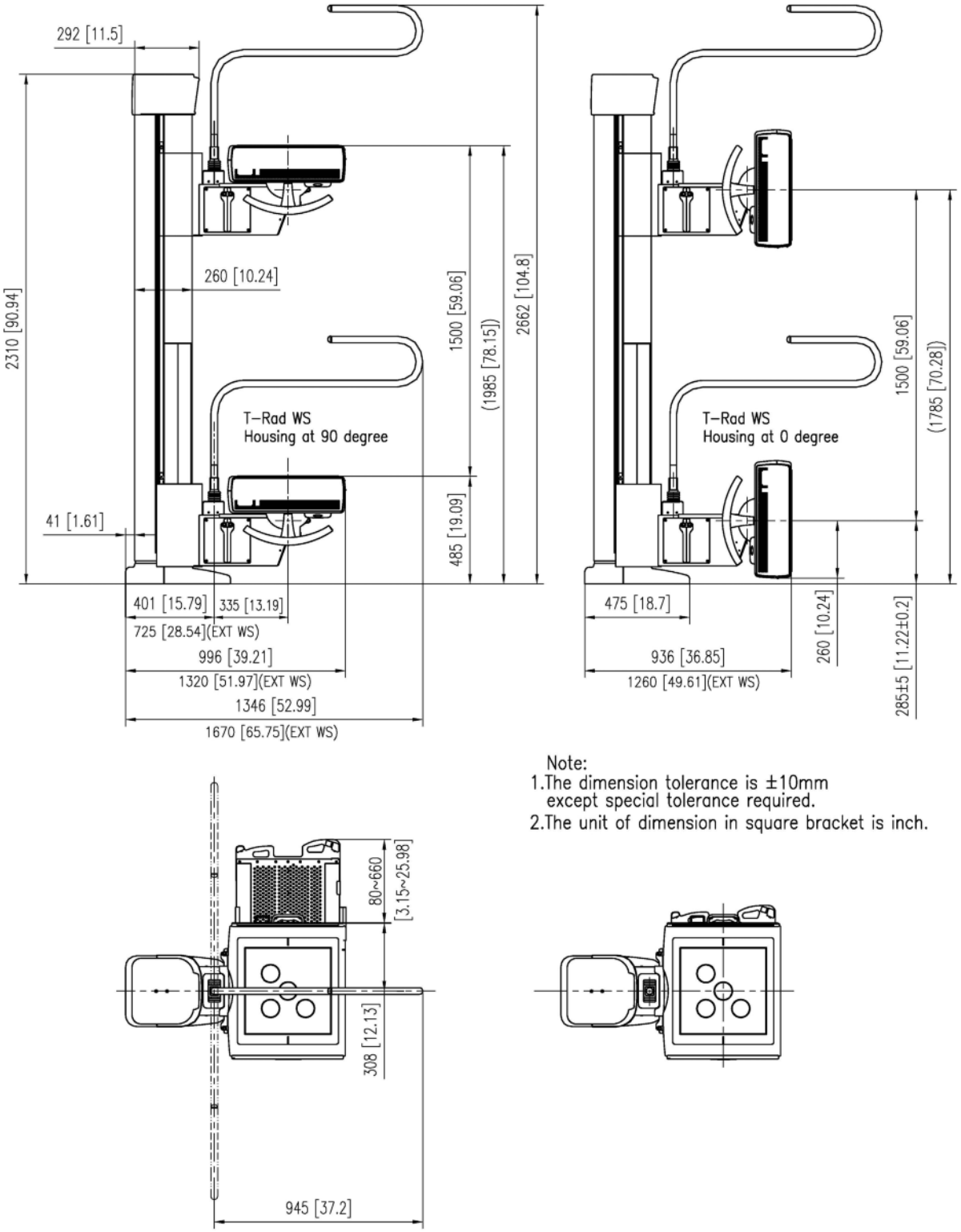

Illustration 2-32: Wall Stand Base Plate Dimensions

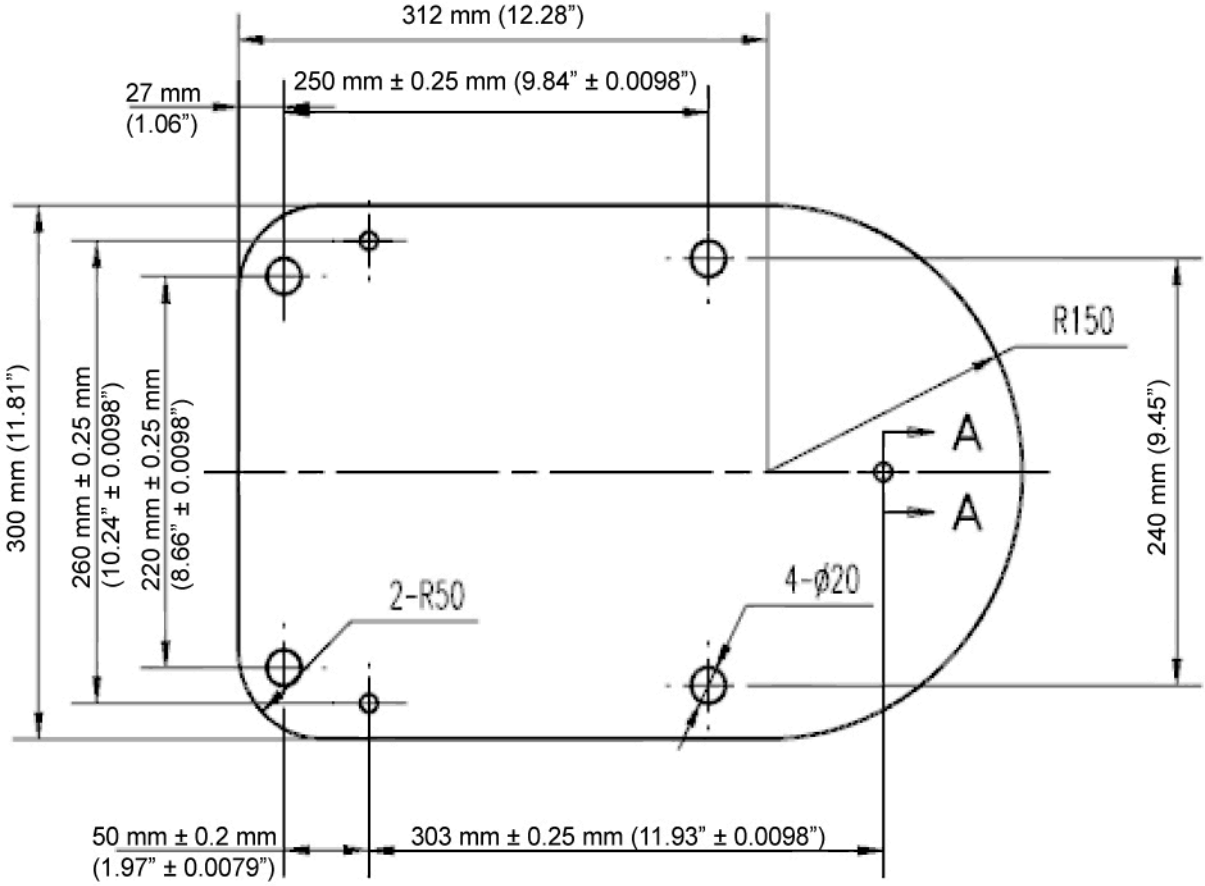

2.7 Stretcher Tables

Illustration 2-33: E6401J Stretcher Dimensions (optional)

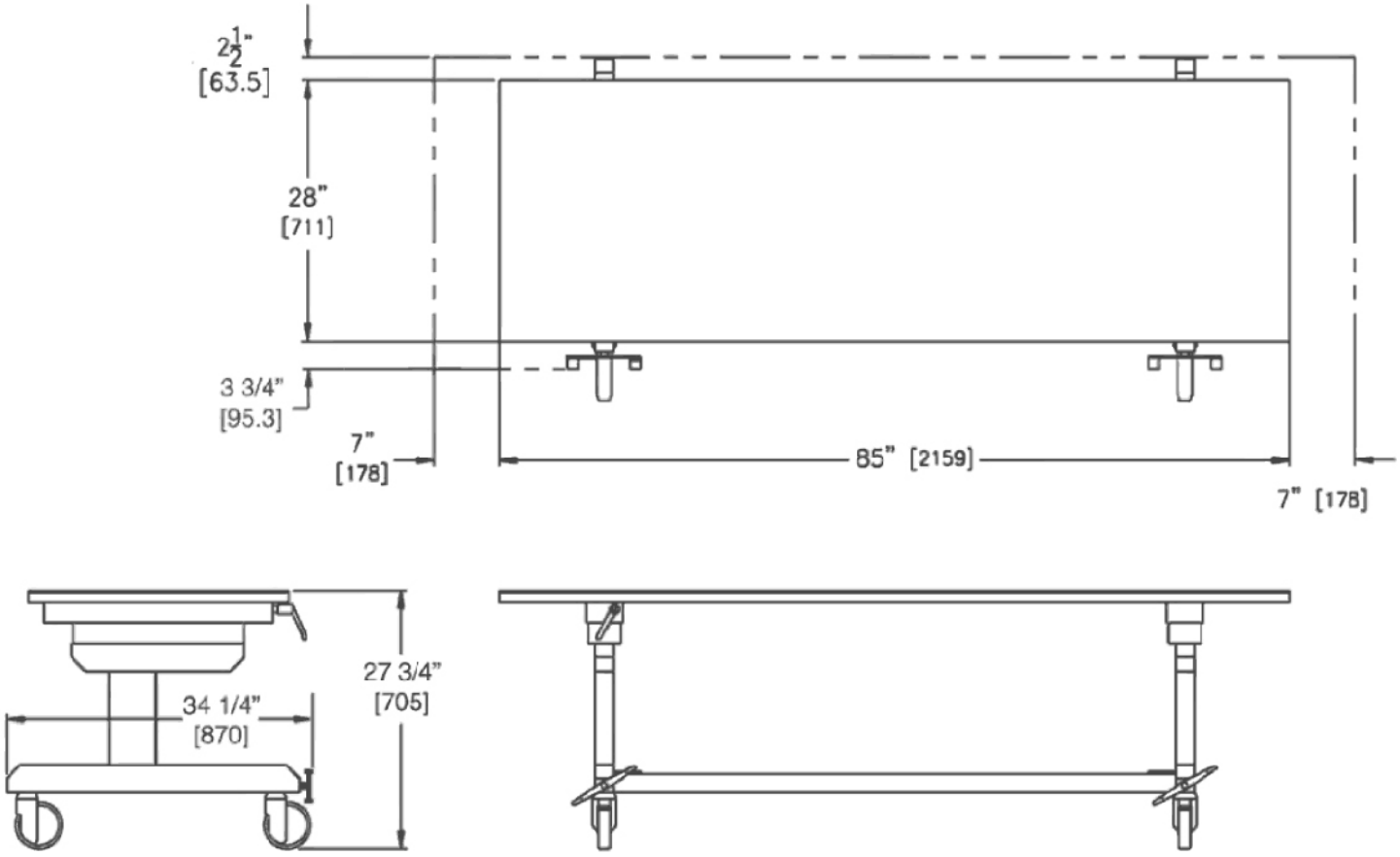

Illustration 2-34: S1700JM Carbon Fiber Stretcher Dimensions (optional)

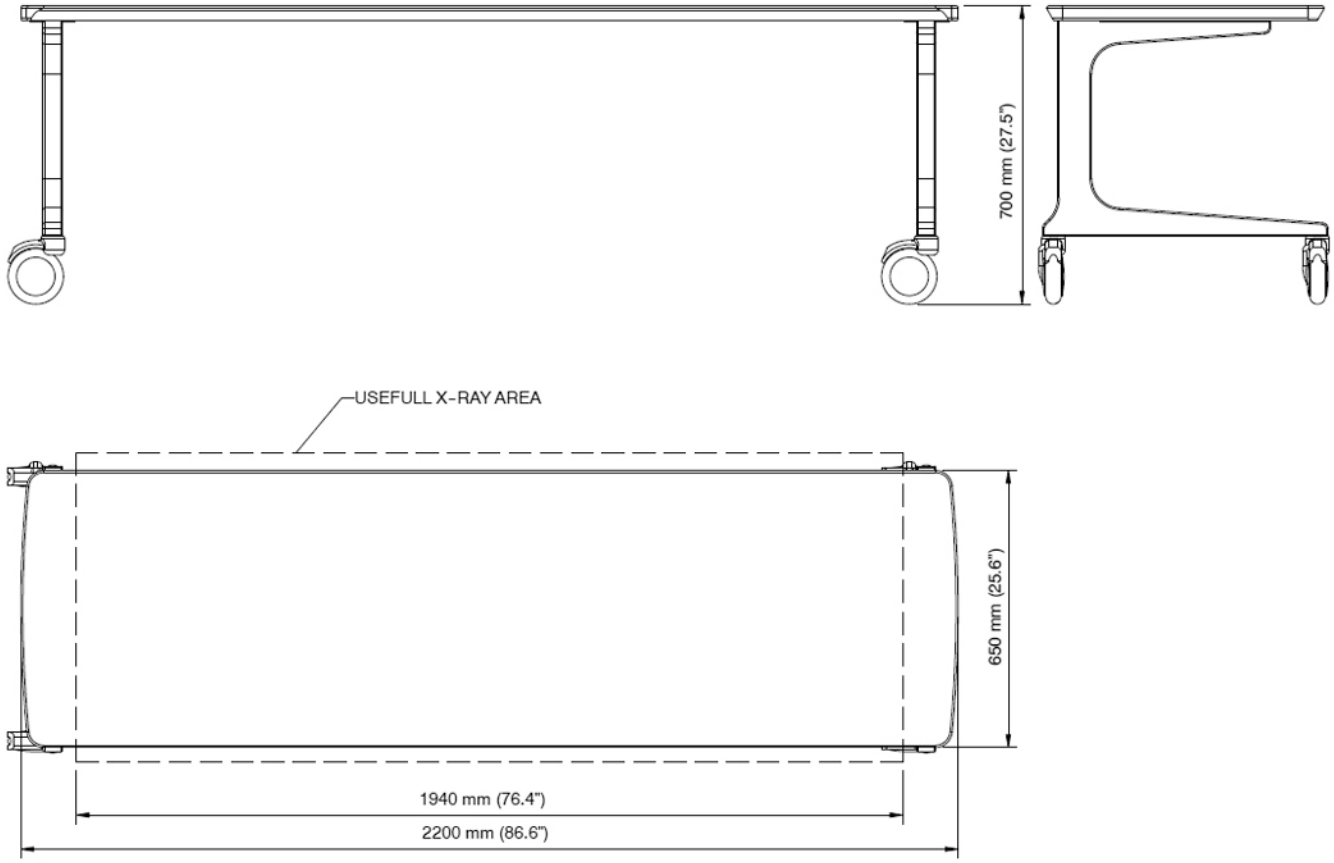

Illustration 2-35: E6401K and E10811VB Stretcher Dimensions (optional)

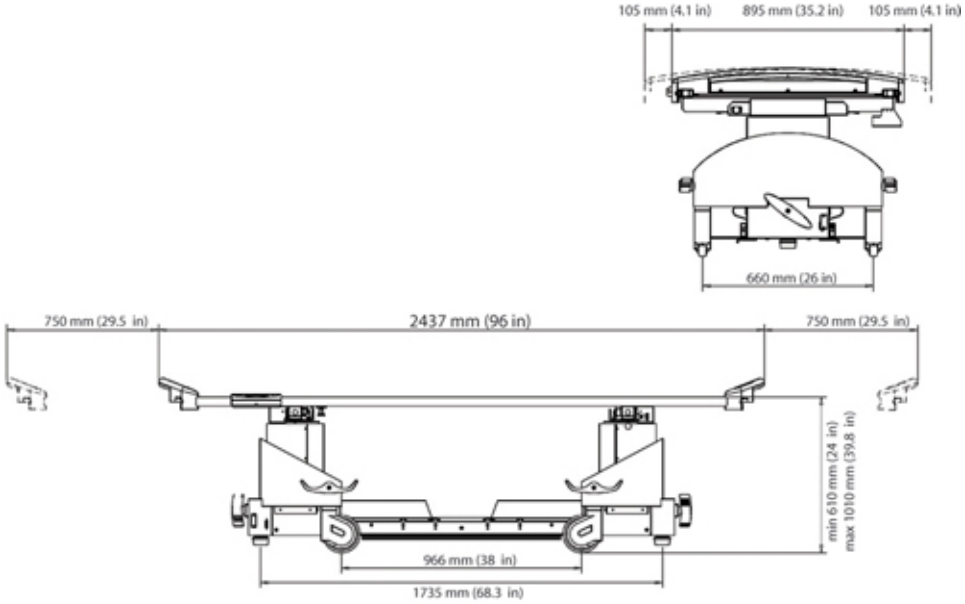

2.8 Image Pasting Barrier

Illustration 2-36: Image Pasting Barrier with Footstool (optional)

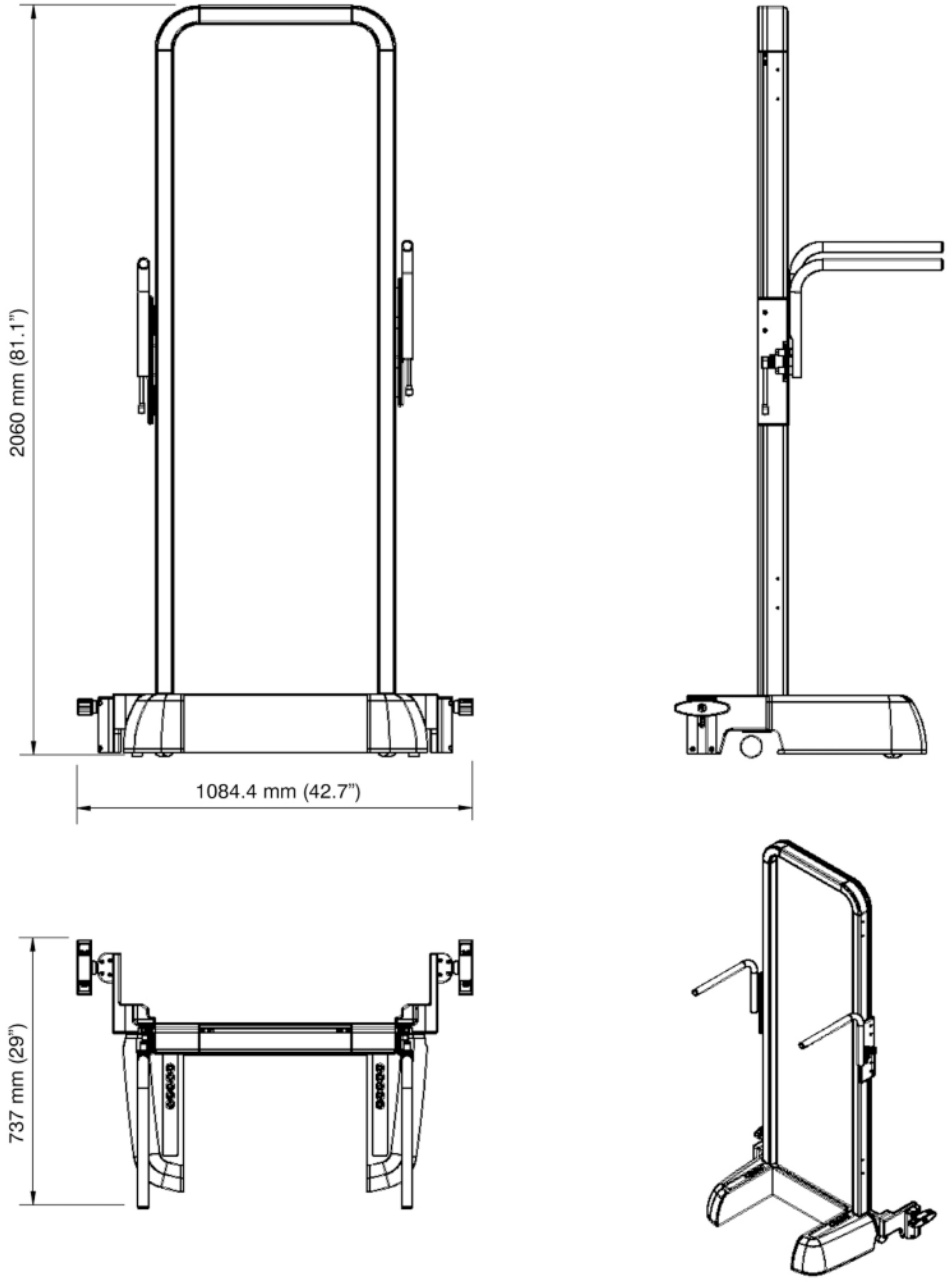

Illustration 2-37: Image Pasting Barrier Drilling Template

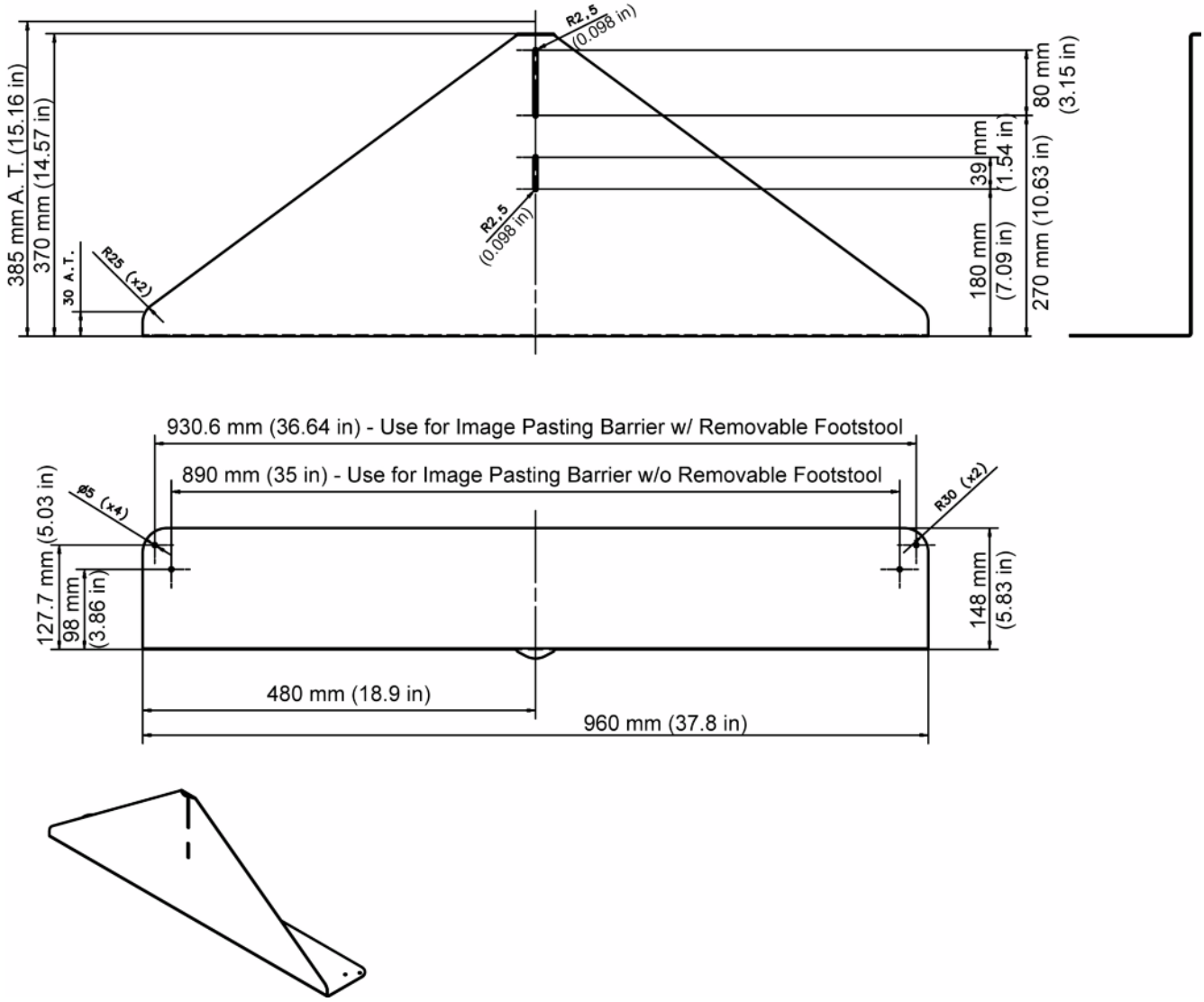

Illustration 2-38: Weight Bearing Rolling Stand

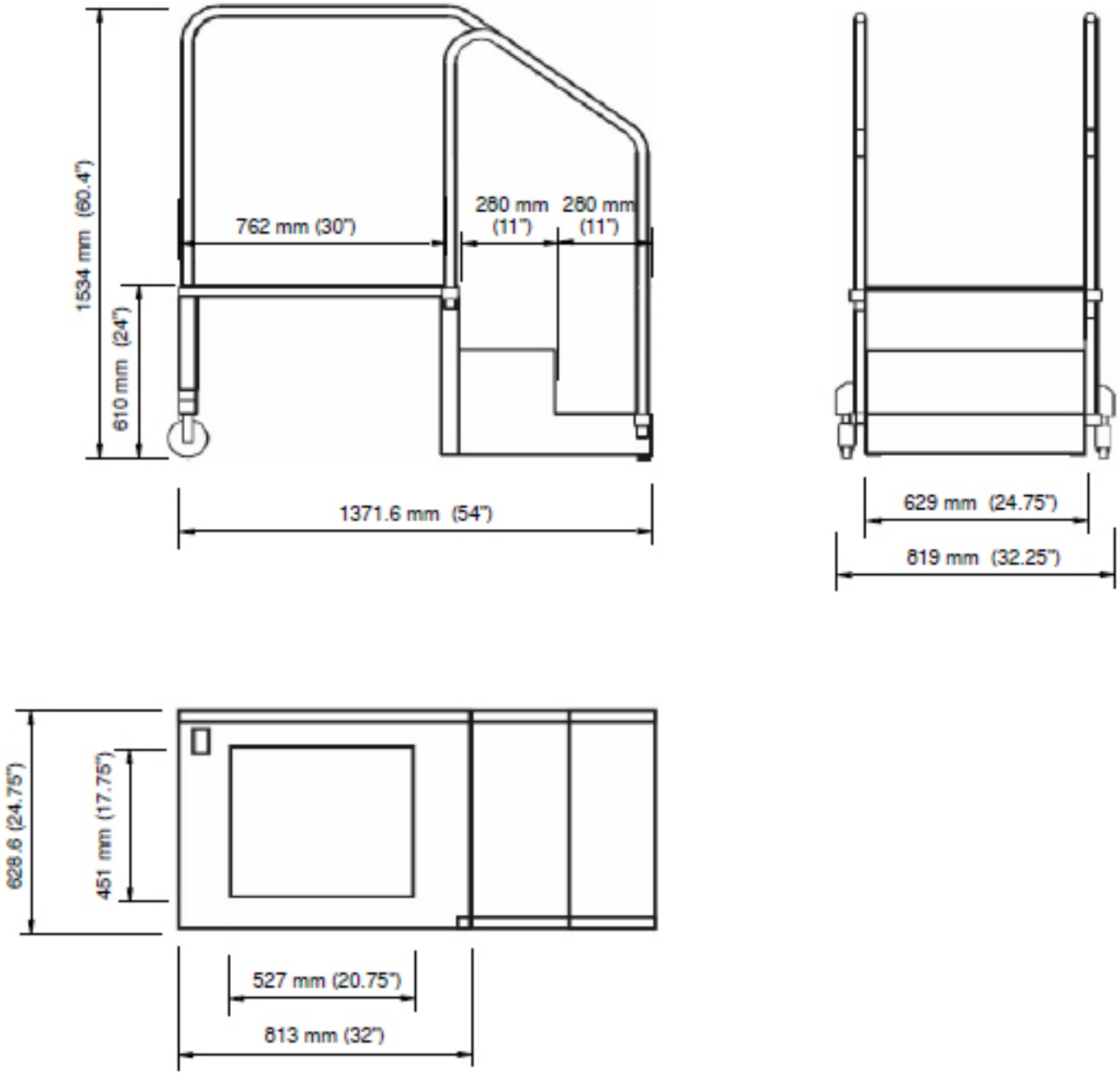

2.9 Weights, Floor/Ceiling Loading and Recommended Mounting Methods

Table 2-5: Product Physical Characteristics (weight)

PRODUCT OR COMPONENT	WEIGHT	LOAD BEARING AREA ft^2 (m^2)	WEIGHT / OCCUPIED AREA kg/m^2 ($lb./ft^2$)	RECOMMENDED MOUNTING INFORMATION
Operator Console: PC Tower xw6400 PC Tower xw8600 Monitor	15 kg (33 lbs) 19.5-28.0 kg (40-62 lbs) 8.2 kg (18.1 lbs)		NA NA NA	Shelf or table mounted but not anchored.
Table Assembly	450 kg (992 lbs)	0.838 m^2	537kg/m^2 (118.4 $lbs/ft.^2$)	Floor mounting Recommendations: (4) M8 X 190 mm anchors (2400546, supplied)
Stretchers (optional): Non-elevating Non-elevating (carbon fiber) Elevating (Europe-only)	102 kg (225 lbs) 32 kg (70.5 lb) 310 kg (683 lbs)		25.5 (56.25) point contact 8 (17.63) point contact 77.5 (170.75) point contact	Not anchored Not anchored Not anchored
Wall Stand	270 kg (596 lbs)	0.129 m^2	2016 kg/m^2	Bossard M10x150L anchors to floor (supplied)
Extended Wall Stand	280 kg (618 lbs)	0.129 m^2	2171 kg/m^2	Bossard M10x150L anchors to floor (supplied)
Stationary Rail (5.79 m)	62.6 kg (138 lbs) pair		NA	
2 Meter Bridge	64 kg (140 lbs)		NA	
3 Meter Bridge	84 kg (185 lbs)		NA	
4 Meter Bridge	138.3 kg (305 lbs)		NA	
2 Meter Cable Assembly	42 kg (93 lbs)		NA	
3 Meter Cable Assembly	49 kg (108 lbs)		NA	
4 Meter Cable Assembly	49.9 kg (110 lbs)		NA	
2 Meter Cable Drape Track Kit	3.3 kg (7.25 lbs)		NA	
3 Meter Cable Drape Track Kit	3.6 kg (7.9 lbs)		NA	
4 Meter Cable Drape Track Kit	4.2 kg (9.25 lbs)		NA	
Cable Drape Support	29.5 kg (65 lbs)		NA	
Overhead Tube Support (includes X-ray Tube)	215.5 kg (475 lbs)		NA	
Upper OTS Covers	9.5 kg (21 lbs)		NA	
Collimator	14 kg (31 lbs)		NA	
Stiffener Plate	10.4 kg (23 lbs)		NA	
UIF	3.2 kg (7 lbs)		NA	
Longitudinal Drive	13.6 kg (30 lbs)		NA	
2 Meter and 3 Meter Longitudinal Drive Belt Kit	19.7 kg (43.5 lbs)		NA	

PRODUCT OR COMPONENT	WEIGHT	LOAD BEARING AREA ft^2 (m^2)	WEIGHT / OCCUPIED AREA kg/m^2 ($lb./ft^2$)	RECOMMENDED MOUNTING INFORMATION
4 Meter Longitudinal Drive Belt Kit	33.3 kg (73.3 lbs)		NA	
Anti-backlash Kits	5.4 kg (12 lbs)		NA	
System Cabinet	308 kg (679 lbs)	0.65 m2 (7 ft.2)	474 kg/m^2) (97 lbs/ $ft.^2$ft)	3/8 in. or 10 mm (4) anchors to floor 5/16 in. or 8 mm (2) anchors to wall (Mounting hardware not provided by GEHC)
Grid Holder Assembly	13.8 kg (30.42 lbs)		NA	Mount on wall
Weight Bearing Rolling Stand (option)	55.8 kg (123 lb)		13.95 (30.75) point contact	Not anchored
Image Pasting Barrier with Footstool (option)	90.7 kg (200 lbs)		22.7 (50) point contact	Floor mounted but not anchored. Located near Wall Stand base.

3 Room Layout

3.1 Required Service Access Clearance

Allow appropriate space for service access of equipment. Illustrations are shown below indicating the required access space for servicing the equipment.

Illustration 2-39: System Cabinet

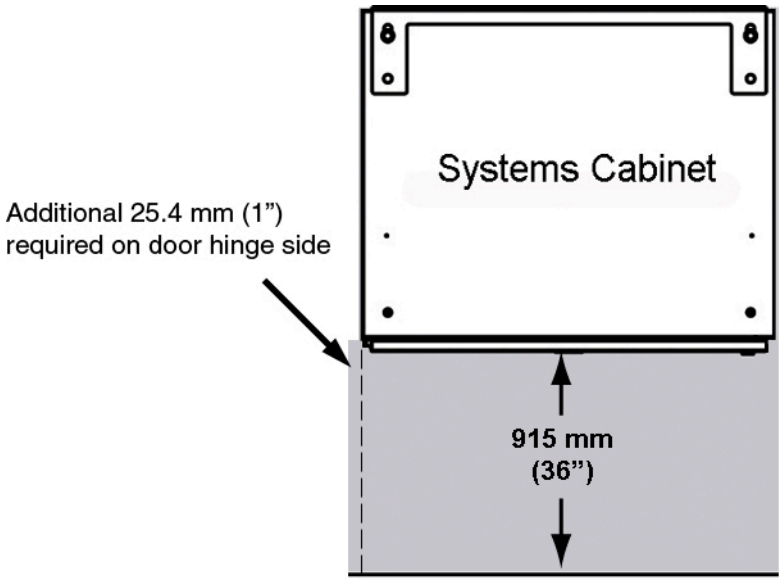

Illustration 2-40: Table

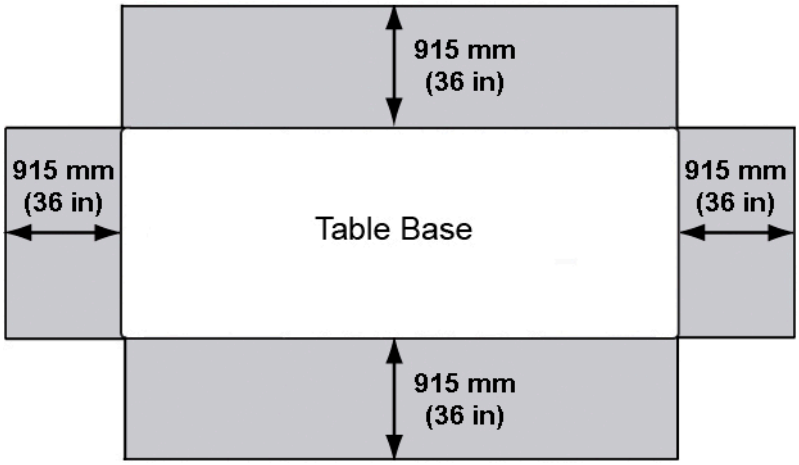

Illustration 2-41: Wall Stand

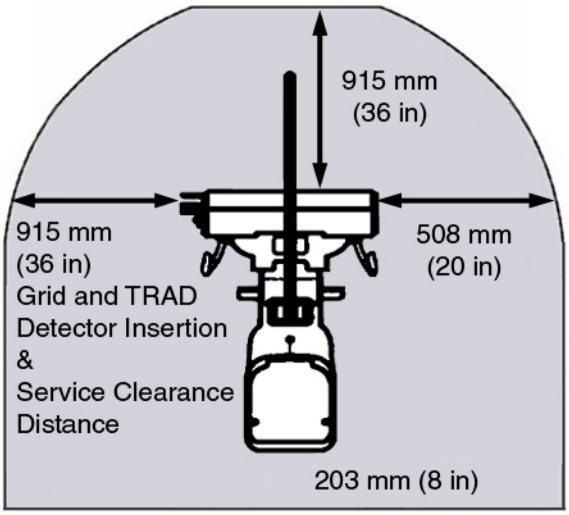

NOTE: Illustration 2-41 represents a typical layout with minimum service clearances. The Grid and TRAD Detector Insertion can be moved to the right side of the Wall Stand. With this change the left side service clearance can be reduced from 915 mm (36”) to 508 mm (20”). However, the right side service clearance must be increased from 508 mm (20”) to 915 mm (36”).

3.2 Clinical Access

Make sure that you plan the room with the following clinical access requirements:

- Provide easy access to the patient table. Stretchers and other mobile hospital equipment must reach the table quickly.
- Table cannot be installed at 90 degrees to the ceiling stationary rails.
- When installing an extended-arm Wall Stand, the Wall Stand should be positioned directly in the center of the 3-meter/4-meter bridge if full tube angling capabilities are to be achieved.
- The room drawings for the Wall Stand and Table rooms with the Wall Stand at the head or foot position show the minimum dimensions assuming the floating table top is moved all the way back out of the way. If this is not an acceptable step in the customer workflow, the minimum dimension for the Center Line of Table to the Center Line of Wall Stand should be increased from 813 mm (32.0”) to 1019 mm (40.2”).
- The Wall Stand can be configured to allow TRAD detector and grid insertion direction from either the left or the right. Workflow and room dimensions should be considered.

3.3 Peripheral Equipment

Consult hospital personnel regarding additional space requirements for the following types of hospital equipment:

- Storage Cabinets

- Sinks
- Oxygen Stations
- Monitoring Equipment
- Crash Cart

3.4 Room Layout Drawings

In below, √ indicates which room configurations are supported for the System.

Table 2-6: Optima XR640 System Configurations

System	Wall Stand	Bridge Length, Wall Stand Position											
	Standard or Extended	2M Bridge				3M Bridge				4M Bridge			
		Front	Back	Hd	Ft	Front	Back	Hd	Ft	Front	Back	Hd	Ft
WS Only	Standard			√	√	√	√	√	√	√	√	√	√
WS Only	Extended			√	√			√	√			√	√
Table Only		√				√				√			
WS & Table	Standard			√	√	√	√	√	√	√	√	√	√
WS & Table	Extended			√	√			√	√			√	√

Drawings for these room configurations are shown in the following pages. They include dimensional requirements between components and show which Tomo and Image Pasting applications (purchaseable options) can be used in a room that meets those dimensional requirements.

Illustration 2-42: Standard Arm Wall Stand, No Table

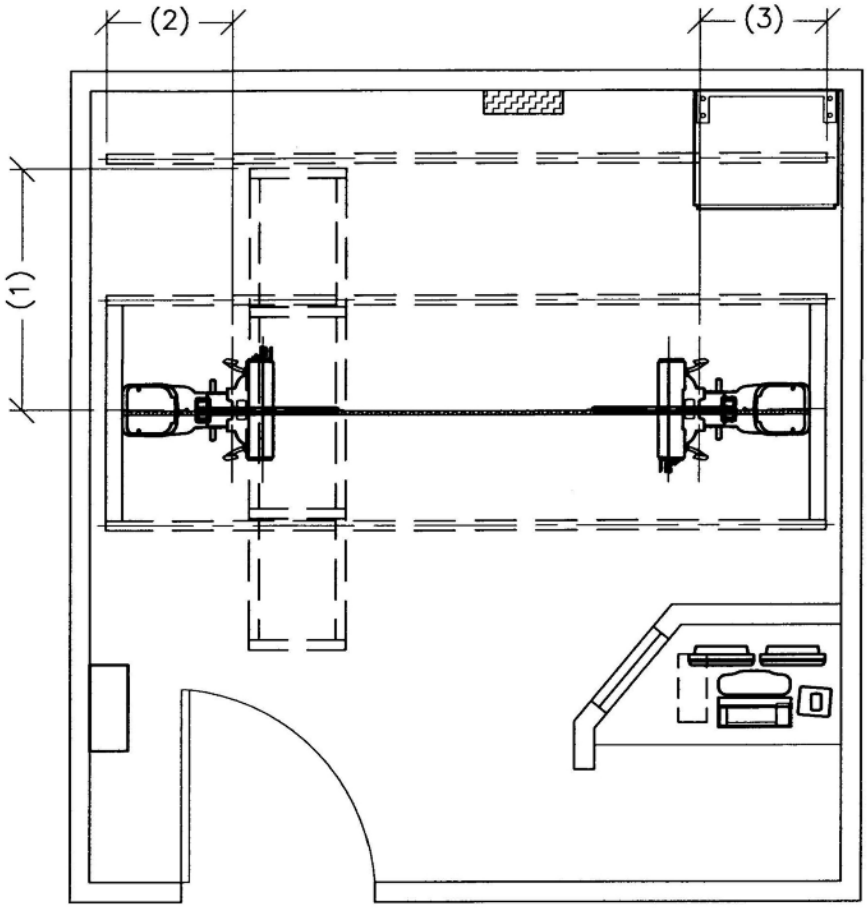

ITEM	BRIDGE LENGTH	DIMENSION	DESCRIPTION
(1)	2M	Min 755mm (29.7")	Back of Bridge to Center Line of Wallstand
		Max 1591mm (62.6")	
	3M	Min 755mm (29.7")	
		Max 2539mm (100.0")	
	4M	Min 755mm (29.7")	
		Max 3865mm (152.2")	
(2)	ALL	Min 500mm (19.7")	Head End of Rail to Center Line of Tilted Detector
(3)	ALL	Min 650mm (25.6")	Foot End of Rail to Center Line of Tilted Detector

THE FOLLOWING TOMO & IMAGE PASTING APPLICATIONS ARE POSSIBLE WITH THE LAYOUT AS SHOWN IN THESE DRAWINGS	YES	NO
WALLSTAND IMAGE PASTE	✓	
TABLE IMAGE PASTE		✓

Illustration 2-43: Extended Arm Wall Stand, No Table

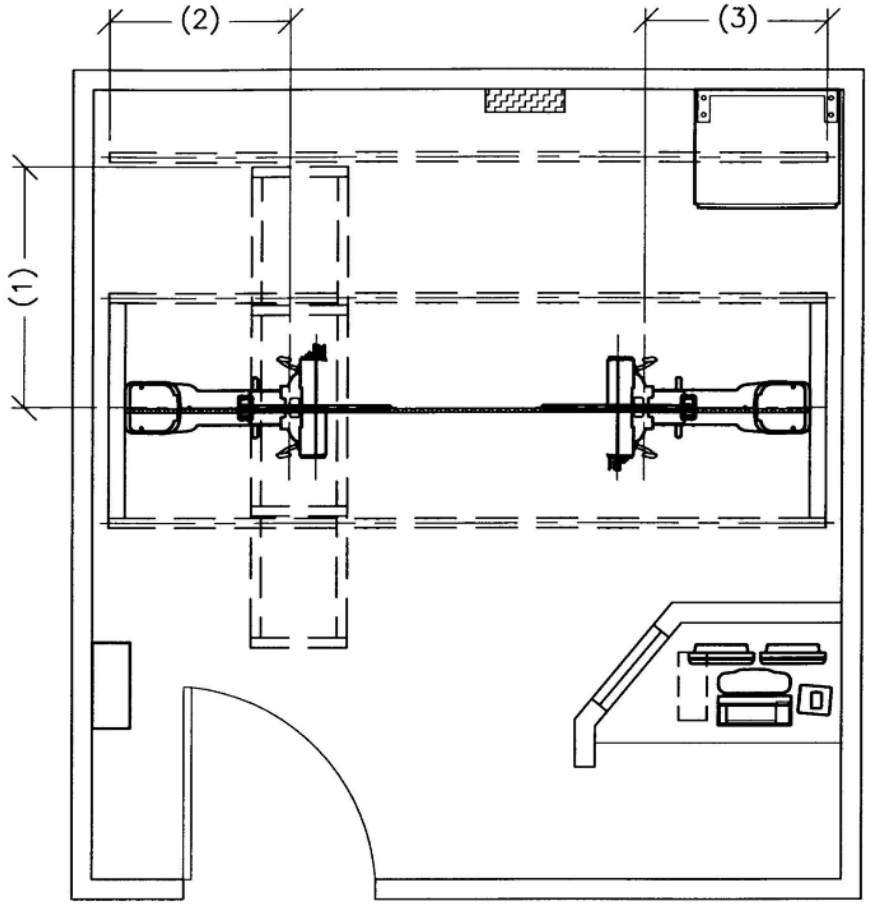

ITEM	BRIDGE LENGTH	DIMENSION	DESCRIPTION
(1)	2M	Min 755mm (29.7")	Back of Bridge to Center Line of Wallstand
		Max 1591mm (62.6")	
	3M	Min 755mm (29.7")	
		Max 2539mm (100.0")	
	4M	Min 755mm (29.7")	
		Max 3865mm (152.2")	
(2)	ALL	Min 820mm (32.3")	Head End of Rail to Center Line of Tilted Detector
(3)	ALL	Min 980mm (38.6")	Foot End of Rail to Center Line of Tilted Detector

THE FOLLOWING TOMO & IMAGE PASTING APPLICATIONS ARE POSSIBLE WITH THE LAYOUT AS SHOWN IN THESE DRAWINGS	YES	NO
WALLSTAND IMAGE PASTE	✓	
TABLE IMAGE PASTE		✓

Illustration 2-44: Standard Arm Wall Stand at Foot, Table

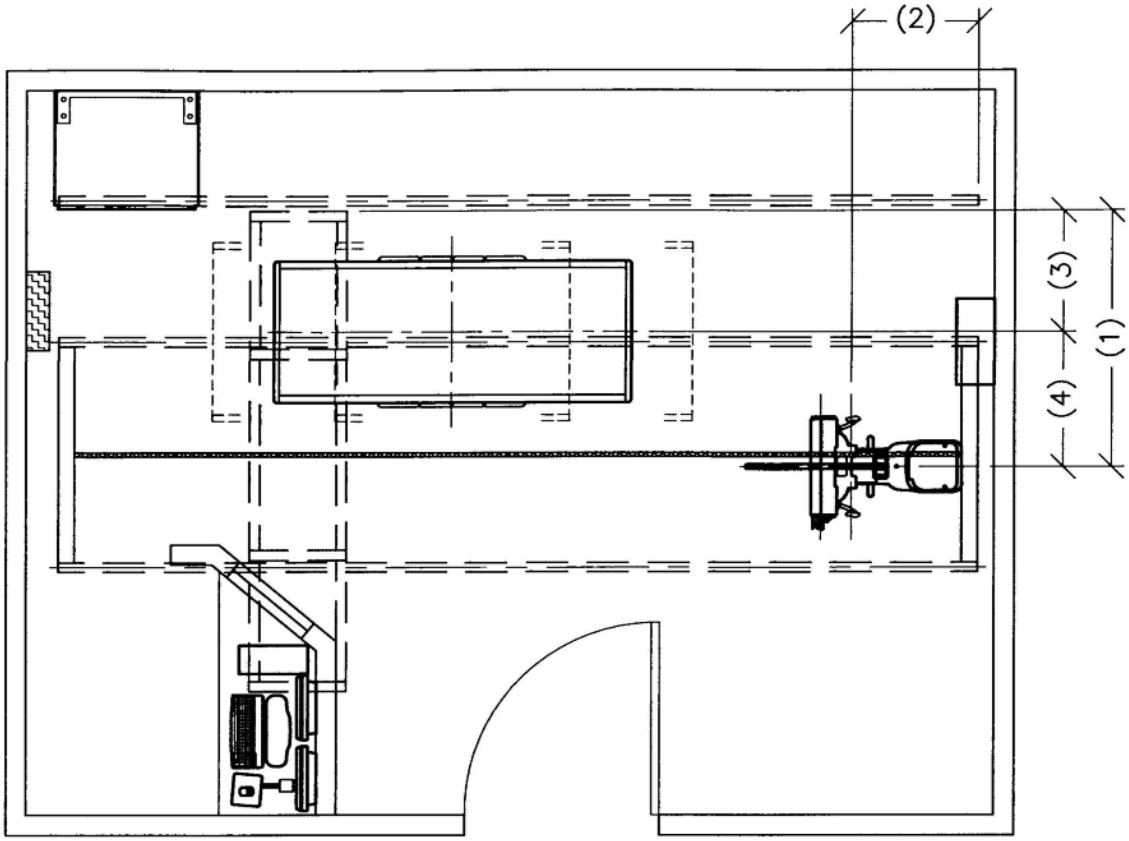

ITEM	BRIDGE LENGTH	DIMENSION	DESCRIPTION
(1)	2M	Min 1513mm (59.6")	Back of Bridge to Center Line of Wallstand
		Max 1591mm (62.6")	
	3M	Min 1513mm (59.6")	
		Max 2539mm (100.0")	
	4M	Min 1513mm (59.6")	
		Max 3865mm (152.2")	
(2)	ALL	Min 650mm (25.6")	Foot End of Rail to Center Line of Tilted Detector
(3)	ALL	Min 700mm (27.6")	Back of Bridge to Center Line of Table
(4)	ALL	Min 813mm (32.0")	Center Line of Table to Center Line of Wallstand

THE FOLLOWING TOMO & IMAGE PASTING APPLICATIONS ARE POSSIBLE WITH THE LAYOUT AS SHOWN IN THESE DRAWINGS	YES	NO
WALLSTAND IMAGE PASTE	✓	
TABLE IMAGE PASTE	✓	

Illustration 2-45: Standard Arm Wall Stand at Head, Table

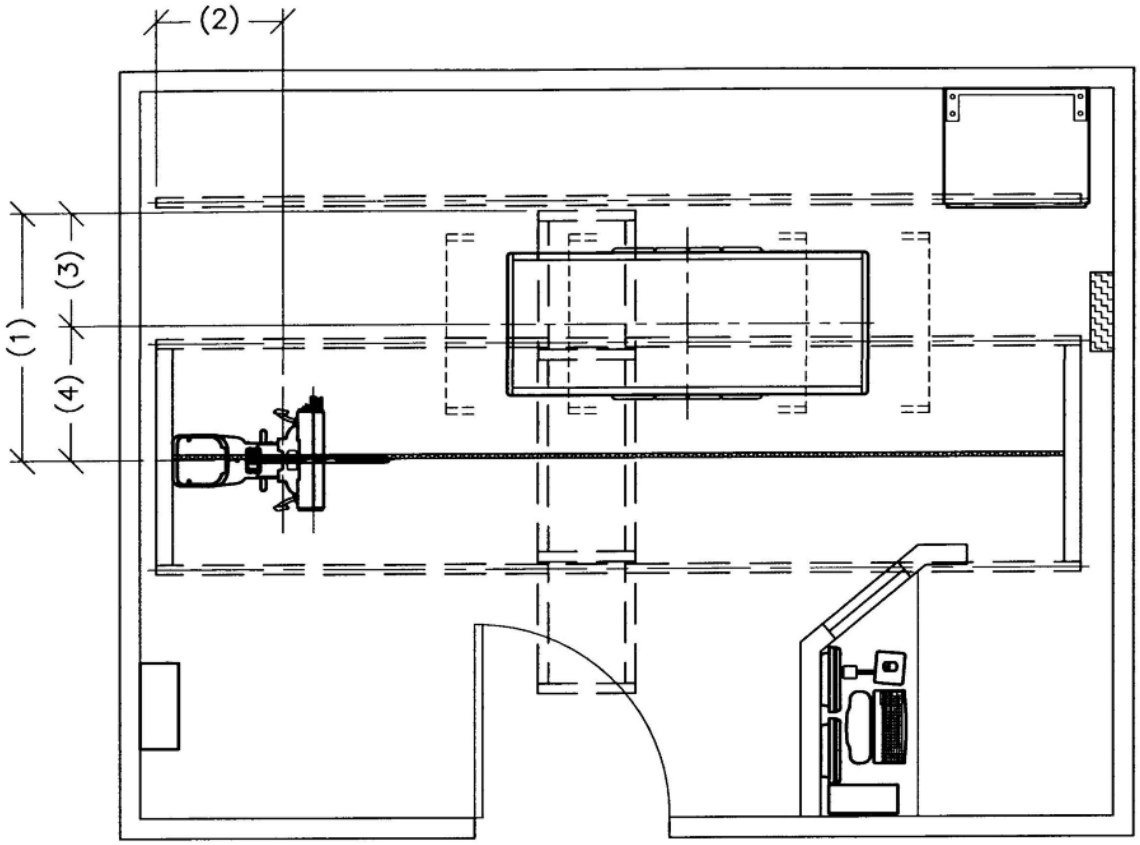

ITEM	BRIDGE LENGTH	DIMENSION	DESCRIPTION
(1)	2M	Min 1513mm (59.6")	Back of Bridge to Center Line of Wallstand
		Max 1591mm (62.6")	
	3M	Min 1513mm (59.6")	
		Max 2539mm (100.0")	
	4M	Min 1513mm (59.6")	
		Max 3865mm (152.2")	
(2)	ALL	Min 500mm (19.7")	Head End of Rail to Center Line of Tilted Detector
(3)	ALL	Min 700mm (27.6")	Back of Bridge to Center Line of Table
(4)	ALL	Min 813mm (32.0")	Center Line of Table to Center Line of Wallstand

THE FOLLOWING TOMO & IMAGE PASTING APPLICATIONS ARE POSSIBLE WITH THE LAYOUT AS SHOWN IN THESE DRAWINGS	YES	NO
WALLSTAND IMAGE PASTE	✓	
TABLE IMAGE PASTE	✓	

Illustration 2-46: Standard Arm Wall Stand at Rear/Head, Table

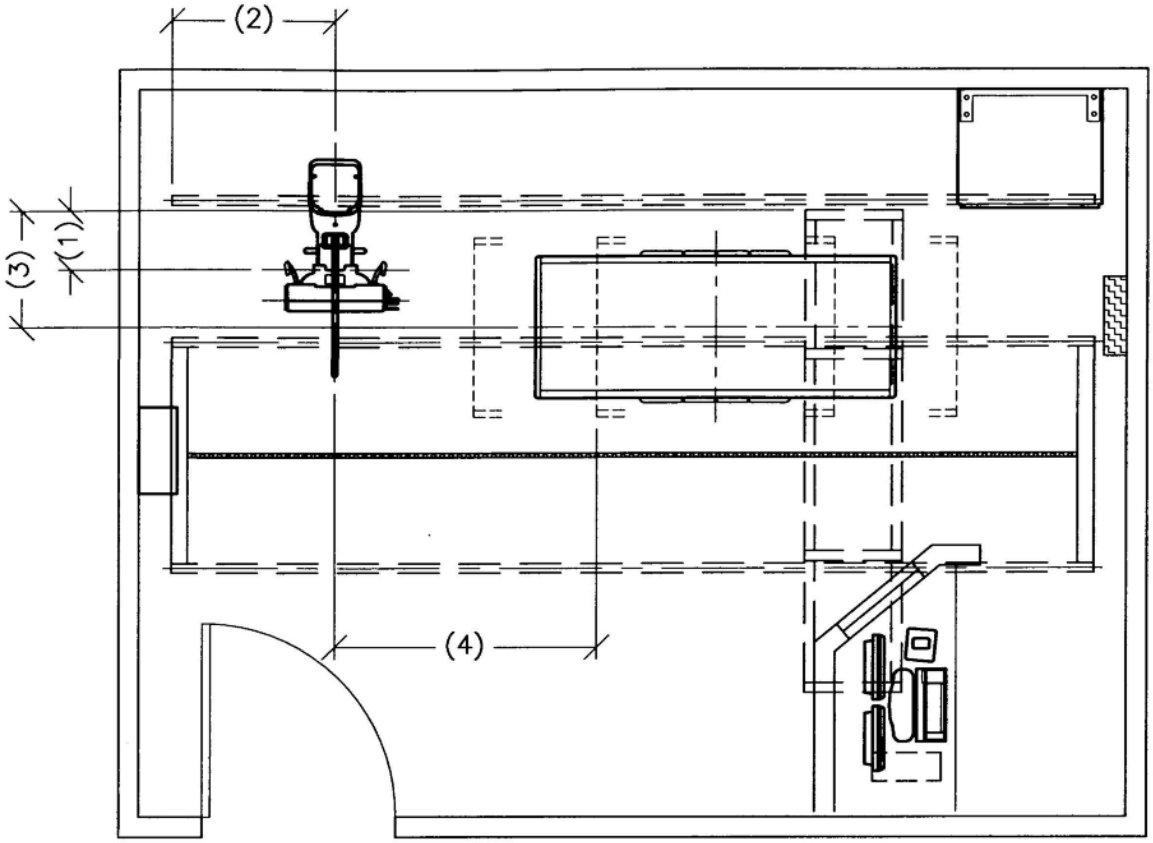

ITEM	BRIDGE LENGTH	DIMENSION	DESCRIPTION
(1)	2M	N/A	Back of Bridge to Center Line of Tilted Detector
	3M	Min 321mm (12.6")	
		Max 180cm SID 406mm	
		Max 72" SID 15.8"	
	4M	Min 321mm (12.6")	
		Max 180cm SID 406mm	
		Max 72" SID 15.8"	
(2)	ALL	Min 920mm (36.2")	Head End of Rail to Center Line of Wallstand
(3)	ALL	Min 700mm (27.6")	Back of Bridge to Center Line of Table
(4)	ALL	Min 460mm (18.1")	Center Line of Wallstand to Edge of Table

THE FOLLOWING TOMO & IMAGE PASTING APPLICATIONS ARE POSSIBLE WITH THE LAYOUT AS SHOWN IN THESE DRAWINGS	YES	NO
WALLSTAND IMAGE PASTE	✓	
TABLE IMAGE PASTE	✓	

Illustration 2-47: Standard Arm Wall Stand at Rear/Foot, Table

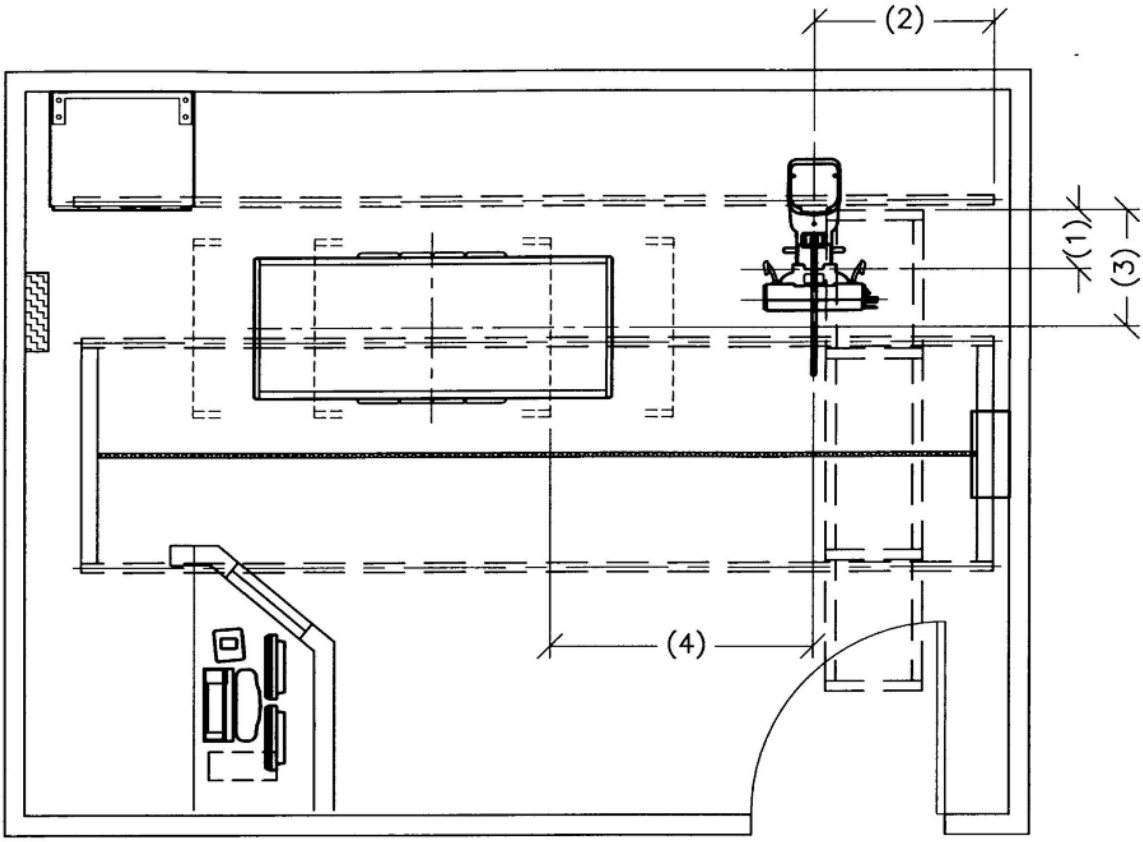

ITEM	BRIDGE LENGTH	DIMENSION	DESCRIPTION
(1)	2M	N/A	Back of Bridge to Center Line of Tilted Detector
	3M	Min 321mm (12.6")	
		Max 180cm SID 406mm	
		Max 72" SID 15.8"	
	4M	Min 321mm (12.6")	
		Max 180cm SID 406mm	
		Max 72" SID 15.8"	
(2)	ALL	Min 1080mm (42.5")	Foot End of Rail to Center Line of Wallstand
(3)	ALL	Min 700mm (27.6")	Back of Bridge to Center Line of Table
(4)	ALL	Min 460mm (18.1")	Center Line of Wallstand to Edge of Table

THE FOLLOWING TOMO & IMAGE PASTING APPLICATIONS ARE POSSIBLE WITH THE LAYOUT AS SHOWN IN THESE DRAWINGS	YES	NO
WALLSTAND IMAGE PASTE	✓	
TABLE IMAGE PASTE	✓	

Illustration 2-48: Standard Arm Wall Stand at Front/Head, Table

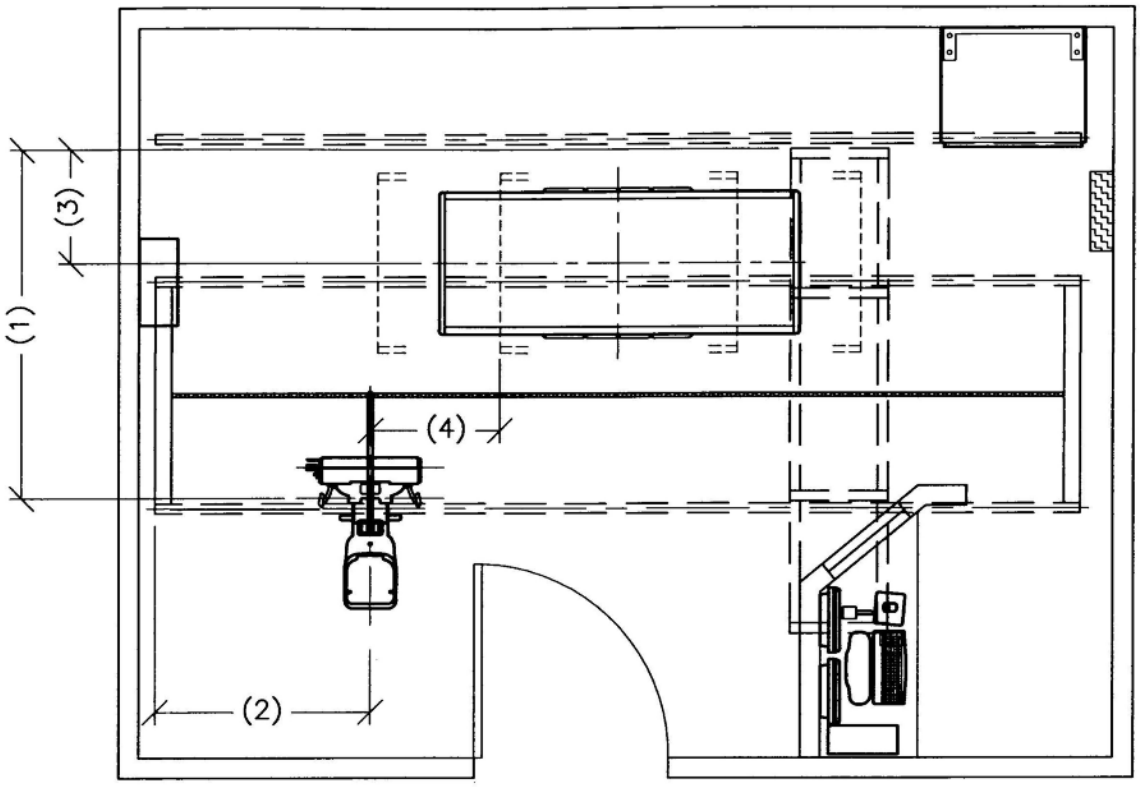

ITEM	BRIDGE LENGTH	DIMENSION	DESCRIPTION
(1)	2M	N/A	Back of Bridge to Center Line of Tilted Detector
	3M	Min 2184mm (86.0")	
		Max 2206mm (86.9")	
	4M	Min 2184mm (86.0")	
		Max 3532mm (139.1")	
(2)	ALL	Min 920mm (36.2")	Head End of Rail to Center Line of Wallstand
(3)	ALL	Min 700mm (27.6")	Back of Bridge to Center Line of Table
(4)	ALL	Min 460mm (18.1")	Center Line of Wallstand to Edge of Table

THE FOLLOWING TOMO & IMAGE PASTING APPLICATIONS ARE POSSIBLE WITH THE LAYOUT AS SHOWN IN THESE DRAWINGS	YES	NO
WALLSTAND IMAGE PASTE	✓	
TABLE IMAGE PASTE	✓	

Illustration 2-49: Standard Arm Wall Stand at Front/Foot, Table

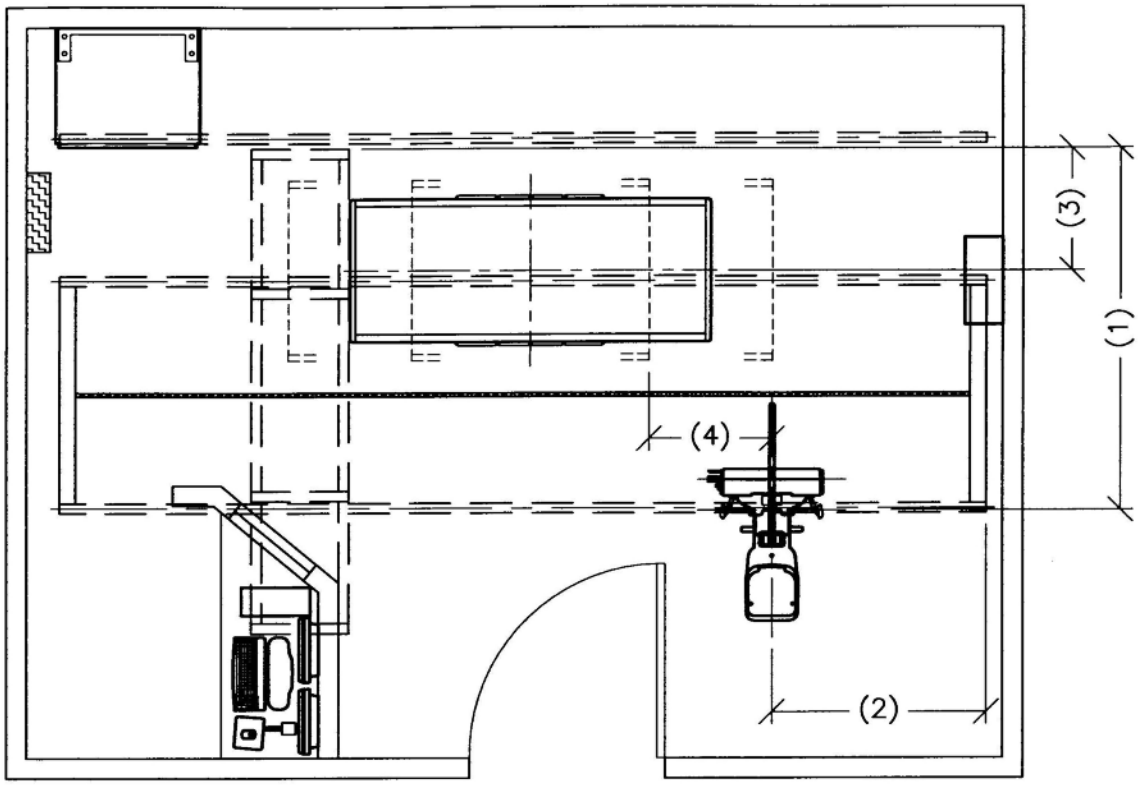

ITEM	BRIDGE LENGTH	DIMENSION	DESCRIPTION
(1)	2M	N/A	Back of Bridge to Center Line of Tilted Detector
	3M	Min 2184mm (86.0")	
		Max 2206mm (86.9")	
	4M	Min 2184mm (86.0")	
		Max 3532mm (139.1")	
(2)	ALL	Min 1080mm (42.5")	Foot End of Rail to Center Line of Wallstand
(3)	ALL	Min 700mm (27.6")	Back of Bridge to Center Line of Table
(4)	ALL	Min 460mm (18.1")	Center Line of Wallstand to Edge of Table

THE FOLLOWING TOMO & IMAGE PASTING APPLICATIONS ARE POSSIBLE WITH THE LAYOUT AS SHOWN IN THESE DRAWINGS	YES	NO
WALLSTAND IMAGE PASTE	✓	
TABLE IMAGE PASTE	✓	

Illustration 2-50: Extended Arm Wall Stand at Foot, Table - Option 1

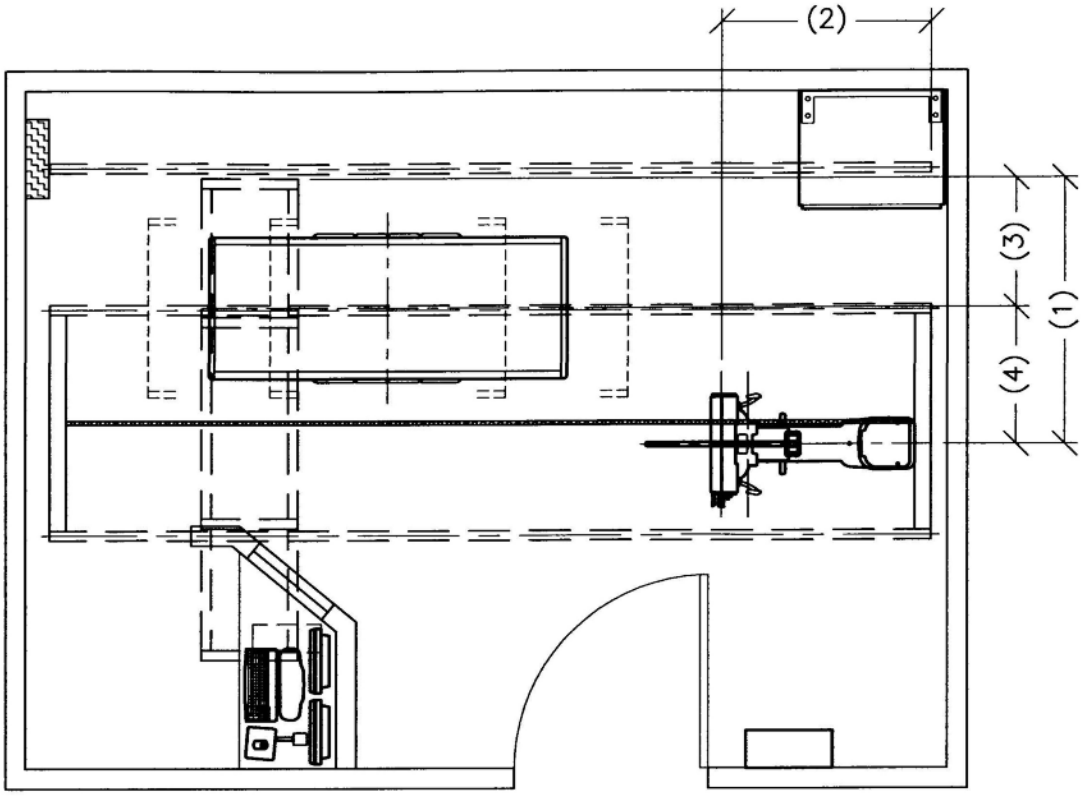

ITEM	BRIDGE LENGTH	DIMENSION	DESCRIPTION
(1)	2M	Min 1513mm (59.6")	Back of Bridge to Center Line of Wallstand
		Max 1591mm (62.6")	
	3M	Min 1513mm (59.6")	
		Max 2539mm (100.0")	
	4M	Min 1513mm (59.6")	
		Max 3865mm (152.2")	
(2)	ALL	Min 980mm (38.6")	Foot End of Rail to Center Line of Tilted Detector
(3)	ALL	Min 700mm (27.6")	Back of Bridge to Center Line of Table
(4)	ALL	Min 813mm (32.0")	Center Line of Table to Center Line of Wallstand

THE FOLLOWING TOMO & IMAGE PASTING APPLICATIONS ARE POSSIBLE WITH THE LAYOUT AS SHOWN IN THESE DRAWINGS	YES	NO
WALLSTAND IMAGE PASTE	✓	
TABLE IMAGE PASTE	✓	

Illustration 2-51: Extended Arm Wall Stand at Head, Table - Option 1

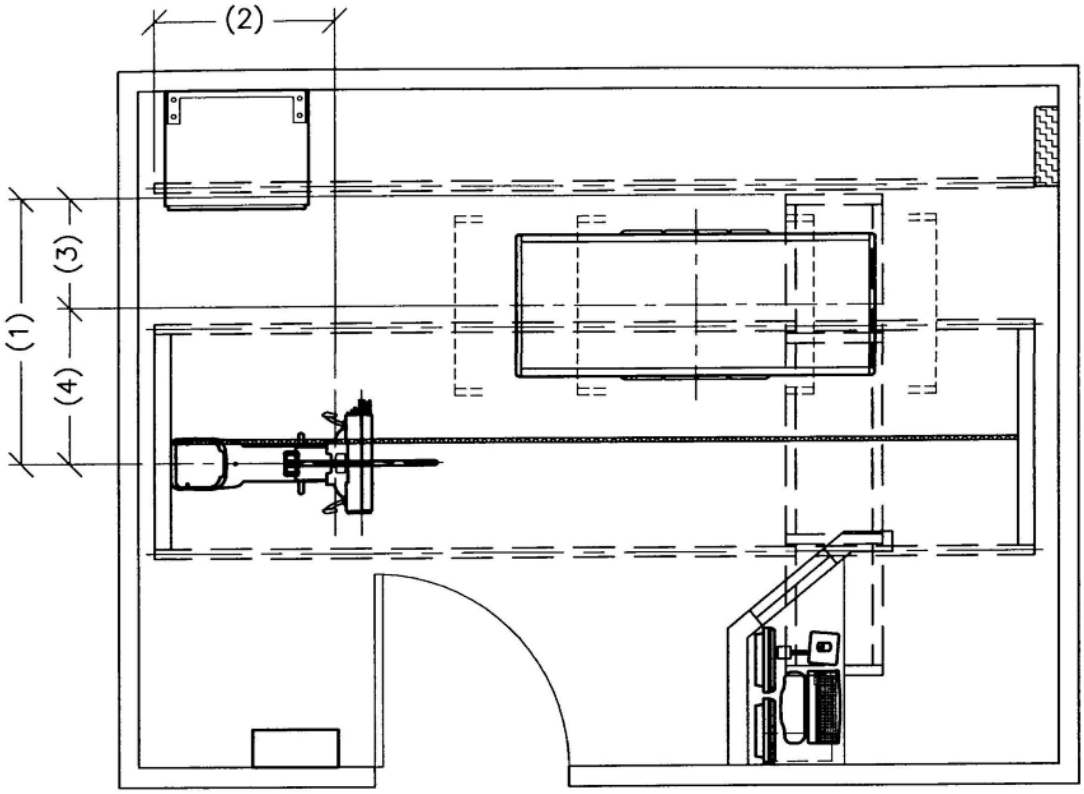

ITEM	BRIDGE LENGTH	DIMENSION	DESCRIPTION
(1)	2M	Min 1513mm (59.6")	Back of Bridge to Center Line of Wallstand
		Max 1591mm (62.6")	
	3M	Min 1513mm (59.6")	
		Max 2539mm (100.0")	
	4M	Min 1513mm (59.6")	
		Max 3865mm (152.2")	
(2)	ALL	Min 820mm (32.3")	Foot End of Rail to Center Line of Tilted Detector
(3)	ALL	Min 700mm (27.6")	Back of Bridge to Center Line of Table
(4)	ALL	Min 813mm (32.0")	Center Line of Table to Center Line of Wallstand

THE FOLLOWING TOMO & IMAGE PASTING APPLICATIONS ARE POSSIBLE WITH THE LAYOUT AS SHOWN IN THESE DRAWINGS	YES	NO
WALLSTAND IMAGE PASTE	✓	
TABLE IMAGE PASTE	✓	

4 Seismic

4.1 Overview

Seismic requirements are determined and specified by the hospital/Design Professional of record and may require approval by the specific state or country agency.

Seismic attachment hardware shown on seismic calculations may differ from hardware supplied with system. Any additional hardware that is required will be the responsibility of the institution and/or their contractor. Contact your local GE representative to obtain seismic calculations.

Seismic calculations are per California Building Code (CBC) and International Building Code (IBC).

4.2 Calculations

Seismic calculations can be obtained for the following:

- Overhead Tube Suspension (OTS)
- System Cabinet (SKL)
- Table (TBL)
- Wall Stand (WLS)
- Extended Wall Stand (WLS)
- Grid Holder (GH)

Chapter 3 Special Construction

1 Radiation Protection

Because X-ray equipment produces radiation, special precautions may need to be taken or special site modifications may be required. The General Electric Company does not make recommendations regarding radiation protection. It is the purchasers responsibility to consult a radiation physicist for advice on radiation protection in X-ray rooms.

This page left intentionally blank.

Chapter 4 HVAC

1 Environmental Requirements

1.1 Relative Humidity and Temperature

Table 4-1: Environmental Requirements (Relative Humidity & Temperature)

Product or Component	RELATIVE HUMIDITY (Non-Condensing)		Temperature	
	IN-USE		IN-USE	
	MIN	MAX	MIN.	MAX.
Digital Detector	10%	95%	50° F (10° C)	95° F (35° C)
Wall Stand Std. & Ext.	20%	80%	50° F (10° C)	104° F (40° C)
Table (TBL)	20%	85%	50° F (10° C)	104° F (40° C)
OTS	20%	85%	50° F (10° C)	104° F (40° C)
System Cabinet (SKL1)	20%	80%	59° F (15° C)	95° F (35° C)
Maxiray 100-09 X-ray Tube	-	-	0	104° F (40° C)
Operator Console:				
PC Tower	8%	85%	40° F (5° C)	95° F (35° C)
LCD Monitor	30%	80%	41° F (5° C)	95° F (35° C)
Radiographic Stretcher Table (optional)	20%	95%	50° F (10° C)	104° F (40° C)
Carbon Fiber Stretcher Table (optional)	30%	75%	50° F (10° C)	104° F (40° C)

Limits for rates of change:

In-Use	Storage
< 10 degree C / hour	< 20 degree C / hour
< 30% / hour	< 30% / hour

1.2 Altitude and Atmospheric Pressure

Table 4-2: Environmental Requirements - (Altitude & Atmospheric Pressure)

Product or Component	ALTITUDE				ATMOSPHERIC PRESSURE			
	IN-USE		STORAGE		IN-USE		STORAGE	
	MIN	MAX	MIN	MAX	MIN	MAX	MIN	MAX
Total System Limits	-30.5 m (-100 ft)	2440 m (8005 ft)	-30.5 m (-100 ft)	3048 m (10000 ft)	650 kPa	1060 kPa	500 kPa	1060 kPa

Limits for rates of change:

In-Use:	Storage:
< 1.8 kPA / hour	< 76 kPA / hour

NOTE: STORAGE values only refer to equipment that is still in shipping containers. If the equipment is partially or completely installed, refer to IN-USE values.

1.3 Heat Output

The standby and in-use heat output of each system component are provided below.

Table 4-3: Heat Outputs by Component

PRODUCT OR COMPONENT	HEAT OUTPUT			
	STANDBY		IN-USE	
Wall Stand / Extended Wall Stand	82 BTU/h	0.024 Kilowatt	280 BTU/h	0.082 Kilowatt
Table	399 BTU/h	0.117 Kilowatt	4224 BTU/h	1.238 Kilowatt
OTS & Collimator	491 BTU/h	0.144 Kilowatt	1351 BTU/h	0.396 Kilowatt
System Cabinet	4869 BTU/h	1.427 Kilowatt	2437 BTU/h	0.714 Kilowatt
PC Tower	980 BTU/h	0.287 Kilowatt	3413 BTU/h	1.000 Kilowatt
LCD Monitor	3 BTU/h	0.001 Kilowatt	157 BTU/h	0.046 Kilowatt
Tube	341 BTU/h	0.100 Kilowatt	2525 BTU/h	0.740 Kilowatt
Detector	27 BTU/h	0.008 Kilowatt	130 BTU/h	0.038 Kilowatt
Total: WS, Table	**7197 BTU/h**	**2.109 Kilowatt**	**14674 BTU/h**	**4.301 Kilowatt**
Total: WS Only	**6798 BTU/h**	**1.992 Kilowatt**	**10450 BTU/h**	**3.063 Kilowatt**
Total: Table Only	**7115 BTU/h**	**2.085 Kilowatt**	**14394 BTU/h**	**4.219 Kilowatt**

Chapter 5 Electrical

1 System Facility Power and Grounds

1.1 Introduction

The purpose of this section is to ensure that the product is properly powered and grounded, thus ensuring the proper operation of the product installed. The information in this section should be adhered to, unless there are written deviations approved by GE Healthcare.

This section gives the sizes and procedures on how to power and ground your system. If these power and grounding instructions are not adhered to, proper operation cannot be guaranteed. Any cost associated and found to be a result of non-conformity, as stated in this section, may result in additional cost charged back to the institution and/or their contractor.

NOTICE

All system and sub-system power connections shall be made ONLY to power outlets that are connected to the system.

1.2 Power Quality

The electrical power, from its origination to the system, must adhere to the wire size and transformer sizes as prescribed in the installation drawings. The feeder voltage-drops, as well as the supplying power, must be within the given parameters. Sizing for feeder is usually calculated for a maximum of 2% voltage drop at the minimum voltage range. The actual feeder sizing may vary from the installation drawing for a facilities voltage.

Calculate feeder losses before you begin. Total feeder losses must be calculated to ensure that the losses are less than those specified in the installation drawings. Calculating the recommended minimum transformer sizing for feeding a system ensures the transformer losses are less than half of the maximum regulation for the system.

Regulation is the calculated voltage losses for the entire power distribution system (No-Load Voltage minus Full-Load Voltage) divided by the no-load voltage minus the system losses (Full-Load Voltage):

$$\text{Regulation} = \frac{\text{NoLoadVoltage} - \text{FullLoadVoltage}}{\text{FullLoadVoltage}} \times 100$$

In the X-ray room, there must be a lockable facility power disconnect. It must be installed electrically before the equipment, for the purpose of locking out the power. This must be done before service to the high voltage system is performed.

1.3 Electrical Grounds

1.3.1 System and Facility Grounds

The ground for this system must originate at the system's power source and be continuous (i.e., transformer or first access point of power into a facility, and be continuous to the system power disconnect in the room). Ground connection at the power source must be at the grounding point of the "Neutral/Ground" if a "Wye" transformer is used, or typical grounding points of a separately derived system. In the case of an external facility, it must be bonded to the facility ground point at the electrical service entrance.

The "system" ground can be spliced using "High Compression Fittings" but must be properly terminated at each distribution panel it passes through. When it is terminated, it must be connected into an approved grounding block. Incoming and outgoing grounds must terminate at this same grounding block. Grounds must only be terminated to approved grounding blocks. Grounds must never connect directly to the panels, frames or other materials in a cabinet or distribution panel.

1.3.2 Recommended Ground Wire Sizes

The ground wire impedance from the system disconnect (including the ground rod) measured to earth, must not exceed 2 ohms (as measured by one of the applicable techniques described in Section 4 of ANSI/IEEE Standard 142 - 1982).

NOTE: For general system grounding requirements and information on establishing an equi-potential grounding system, refer to:

- *Direction 46-014505, Electrical Safety - Equipment Grounding*
- *Direction 46-014546, Electrical Safety - Leakage Currents*

2 Electrical Requirements

2.1 Generator Electrical Requirements

All system components obtain their power from the Power Distribution Unit (PDU) in the System Cabinet. **Providing power and ground wires to the PDU are the responsibility of the customer.** As an aid, wire sizes for various lengths of the power supply cable are shown in the following tables.

NOTE: The length of stripped wires should be longer than 25 mm, and tinned.

NOTE: Shunt trip circuit breaker required. The main circuit breaker supplied by the customer must be sized in accordance to local regulations.

Generator Power Specifications

Table 5-1: JEDI Generator Power Specifications

Input Voltage	380/400/415/440/460/480 VAC Wye 3-Phase and ground without neutral
Daily Voltage variations	+/- 10% (VAC) In this range, the generator will operate without any de-rating in accuracy.
Nominal line frequency (Hz)	50 Hz / 60 Hz
Daily frequency variation (Hz)	+/- 3 Hz
Line Impedance	The apparent line impedance guaranteed by the customer should be equal or less than the values indicated below, according to the voltage value and the commercial power of the system. **Voltage range (V) Line Impedance (ohms)** **3 phase** / **65kW** / **80kW** 380 / 0.118 / 0.096 400 / 0.131 / 0.100 415 / 0.138 / 0.113 440 / 0.154 / 0.125 480 / 0.185 / 0.150 **NOTE:** 400-480 VAC impedance values are based on IEC 601-2-7 standard. Values are interpolated from values in standard.
Inrush current	1000 Amps
HV cable type	USA: 22mm DSI (<= 165 pF/m) HV cable connector = Federal standard
Ground Wire	Same as power cable

2.2 65kW and 80kW System Wire Sizes & kVA Load Characteristics

- Calculations based upon nominal voltage, wire size in AWG. To convert to mm^2, refer to Table 5-2.
- Recommended feeder sizes from distribution transformer to the power cabinet.
- Neutral must be terminated inside the main disconnect panel and not at any GE cabinet.

- The grounding conductor will be of same size as the feeder wires. This ground will run from equipment back to the facility power source / main grounding point and always travel in the same conduit with the feeders and neutral.

Table 5-2: AWG Wire Size Conversion to mm^2

American Wire Gauge (AWG)	Diameter (Inches)	Diameter (mm)	Cross Sectional Area (mm)
4	0.2043	5.19	21.14
3	0.2294	5.83	26.65
2	0.2576	6.54	33.61
1	0.2893	7.35	42.39
1/0	0.3249	8.25	53.46
2/0	0.3648	9.27	67.40
3/0	0.4096	10.40	84.97
4/0	0.46	11.68	107.16
250M	0.575	14.6	126.68
300M	0.630	16.0	152.0
350M	0.681	17.3	177.35
400M	0.728	18.49	202.68

Table 5-3: JEDI Generator 3-Phase 65 kW System - Minimum Wire Size

WIRE RUN LENGTH	INPUT VOLTAGE (VAC)					
	342-418 380	360-440 400	373-456 420	396-484 440	414-506 460	432-528 480
15m (50 ft.)	*4	*4	*4	*4	*4	*4
30m (100 ft.)	3	*4	*4	*4	*4	*4
46m (150 ft.)	2	2	2	3	3	4
61m (200 ft.)	1/0	1	1	2	2	2
77m (250 ft.)	2/0	2/0	1/0	1	1	1
92m (300 ft.)	3/0	2/0	2/0	1/0	1/0	1/0
107m (350 ft.)	4/0	3/0	3/0	2/0	2/0	1/0
122m (400 ft.)	250M	4/0	4/0	3/0	3/0	2/0
138m (450 ft.)	300M	250M	4/0	4/0	3/0	3/0
* minimum wire size for circuit breaker, based on recommended overcurrent protection.						

Table 5-4: JEDI Generator 3-Phase 80 kW System - Minimum Wire Size

WIRE RUN LENGTH	INPUT VOLTAGE (VAC)					
	342-418 380	360-440 400	373-456 420	396-484 440	414-506 460	432-528 480
15m (50 ft.)	*2	*2	*2	*2	*2	*2
30m (100 ft.)	*2	*2	*2	*2	*2	*2
46m (150 ft.)	1/0	1	1	*2	*2	*2
61m (200 ft.)	2/0	2/0	1/0	1/0	1	1
77m (250 ft.)	3/0	3/0	2/0	2/0	1/0	1/0
92m (300 ft.)	4/0	4/0	3/0	3/0	2/0	2/0
107m (350 ft.)	300M	250M	4/0	4/0	3/0	3/0
122m (400 ft.)	350M	300M	250M	4/0	4/0	3/0
138m (450 ft.)	400M	350M	300M	250M	250M	4/0
* minimum wire size for circuit breaker, based on recommended overcurrent protection.						

Table 5-5: JEDI Generator 3-Phase kVA Load Characteristics

ITEM	SPECIFICATION					
PHASE	THREE PHASE					
Nominal line voltage (VAC)	380	400	420	440	460	480
Voltage range (VAC)	+/-10%	+/-10%	+/-10%	+/-10%	+/-10%	+/-10%
Maximum Instantaneous Power (kVA)	118	118	118	118	118	118
Power Factor	0.73	0.73	0.73	0.73	0.73	0.73
Momentary line current (Amps) - during exposure	185	170	162	155	148	144
Continuous line current (Amps) - during standby	15.8	15	13.3	13.6	13	12.5
Inrush Current (Amps)	1000	1000	1000	1000	1000	1000

2.3 Recommended Wall “Circuit-Breaker” Ratings

Table 5-6: Wall Breaker Parameter (Theoretical Current Values)

Power / Voltage	65 kW	80 kW
380 V	74 A / 600 V	95 A / 600 V
400 V	70 A / 600 V	90 A / 600 V
415 V	67 A / 600 V	85 A / 600 V
440 V	64 A / 600 V	82 A / 600 V
460 V	61 A / 600 V	78 A / 600 V
480 V	59 A / 600 V	75 A / 600 V

2.4 Wiring Electrical Power and Disconnects

This section provides additional data regarding power circuits the customer must provide, and internal electrical circuits necessary to supply the correct power to the system. Illustration 5-1 shows the room power supply installed.

2.4.1 Room Power Supply

Illustration 5-1: Room Power Supply (refer to Table 5-7 for Legend)

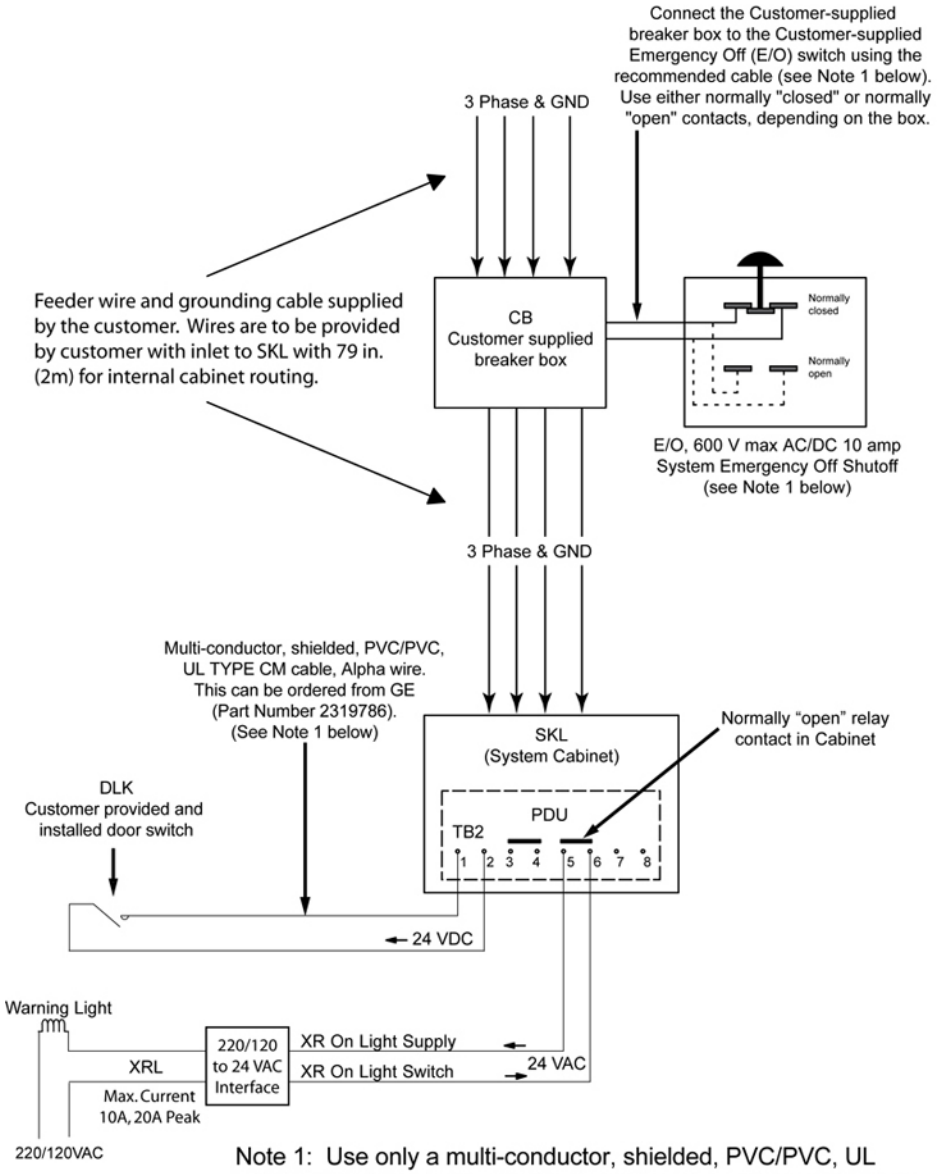

Note 1: Use only a multi-conductor, shielded, PVC/PVC, UL TYPE CM cable, Alpha wire. This can be ordered from GE (Part Number 2319786 - which is a 60 meter roll of 2-conductor braid-shielded wire, AWG 16). This type of cable must be used to hook up the Emergency Off (E/O) and Door Interlock (DLK) switches to the System Cabinet.
The cable shield must be grounded at both ends.

Table 5-7: Legend for Illustration 5-1

United States Key	Description
Feeder Wires and Grounding Cable	Feeder wire and grounding cable supplied by the customer. Wires are to be provided by customer with inlet to SKL with 2 meters for internal cabinet routing).
E/O (see Note below)	Emergency Off switch located near room access door. The switch is supplied by the Hospital. The recommended distance above the floor is 1.5 meters. Use only a multi-conductor, shielded cable to connect to System Cabinet.
XRL	Yellow X-ray emission indicator lamp above the room access door. 220 V in Europe/120 V in USA with 25 W max. bulb (per local regulations). Wires and light fixtures supplied by customer.
DLK (see Note below)	Open-door detector (per local regulations). SKL provides 24 VDC.
CB	Circuit breaker with remote trip (shunt) capabilities supplied by customer.
NOTE:	Use only a multi-conductor, shielded, PVC/PVC, UL TYPE CM cable, Alpha wire. This can be ordered from GE (Part Number 2319786 - which is a 60 meter roll of 2-conductor braid-shielded wire, AWG 16). This type of cable must be used to hook up the Emergency Off (E/O) and Door Interlock (DLK) switches to the System Cabinet. The cable shield must be grounded at both ends.

2.4.2 Multiple Emergency "OFF" Switches

The facility designer determines the quantity and locations of the Emergency OFF (E/O) switches. GE recommends placing at least one Emergency OFF switch near the doorway of every room in the system scan suite.

Illustration 5-2 shows how multiple Emergency "OFF" switches could be wired.

Illustration 5-2: Wiring Multiple "Emergency OFF" (E/O) Switches

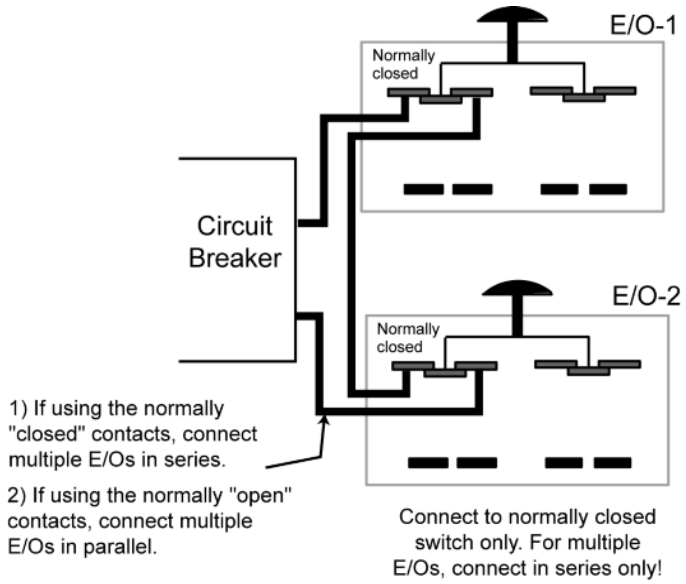

3 Routing Cables

3.1 General

These wires must be kept separated from each other:

- High voltage and power cables must be separated from other cables
- Separate conduits must be used for power and signal wires

Use a separate trough in the duct system, or use a separate conduit.

Minimize cable length between the line disconnect and the System Cabinet power unit to reduce voltage regulation problems and wiring costs.

3.1.1 Electrical Ducts (Recommended)

It is important that electrical ducts have separate compartments for power and signal wires. These wires must be kept separated from each other for proper system operation.

Electrical ducts have advantages, when used with a single room or two adjacent rooms. Electrical ducts combine cabling in a neat and functional appearance, with accessibility and room for expansion.

3.1.2 Conduit

If conduit is used make sure the conduit is large enough to pull the cable and connector through with all the other cables all ready in the conduit.

The use of conduit is recommended for cables running overhead between rooms, especially when a diagonal run provides the shortest cable path.

3.2 Power Distribution

The system power distribution consists of two major components that must either be customer supplied or GE Healthcare supplied. These are:

- Feeder power from Hospital distribution center to the System Cabinet load power unit (SKL).
- Feeder power must be provided via a WYE transformer only with dedicated ground. Neutral is not used.
- Power distribution from the System Cabinet load power unit (SKL) to all the components in the system room.

Usually the feeder power from the Hospital distribution center is customer supplied and the power distribution within the system is supplied by GE Healthcare.

4 System Cable Information

4.1 Introduction

The following information is provided as an aid to make the physical installation of system cables easy and efficient. In the tables that follow, the physical characteristics of each cable and its associated connectors is provided. Thus making it easier to plan cable paths and clearances in advance. Physical characteristics are given for each available cable length. Review cable lengths carefully and choose lengths appropriate for your installation prior to the equipment arriving, to avoid unnecessary installation delays.

Remember, it is up to you to make sure that all cables are routed and connected in accordance with all regulatory laws that may apply.

4.2 Cable Information

4.2.1 Cable Lengths and Characteristics

Table 5-8: 1- System Cabinet to Table; Cable Lengths (in meters)

MIS #	Description	Short Cables (Standard)			Long Cables (Optional)			Voltage Rating
		Part #	Total Length	Usable Length	Part #	Total Length	Usable Length	
020044	Table CANopen	5336144 or 5304296	16	12.5	5336144-7 or 5304296-7	21	17.5	300
020045	Table Ion Chamber	5336144-1 or 5304296-1	16	12.5	5336144-8 or 5304296-8	21	17.5	300
020046	Table Detector PS 120VAC	5336144-2 or 5304296-2	16	12.5	5336144-9 or 5304296-9	21	17.5	300
020047	(Det. 1) Conditioner Status	5336144-3 or 5304296-3	16	12.5	5336144-26 or 5304296-26	21	17.5	300
020048	Table Emergency Stop RT Line	5336144-4 or 5304296-4	16	13.5	5336144-27 or 5304296-27	21	18.5	300
020049	Table Power 220VAC	5336144-5 or 5304296-5	16	13.5	5336144-10 or 5304296-10	21	18.5	600
020050	Table Ground	5336144-6 or 5304296-6	16	13.5	5336144-11 or 5304296-11	21	18.5	600

Table 5-9: 2- System Cabinet to Wall Stand; Cable Lengths (in meters)

MIS #	Description	Short Cables (Standard)			Long Cables (Optional)			Voltage Rating
		Part #	Total Length	Usable Length	Part #	Total Length	Usable-Length	
020052	Wallstand Conditioner 120VAC	5336144-12 or 5304296-12	15	13	5336144-14 or 5304296-14	20	18	600
020053	(Det. 2) Conditioner Status	5336144-13 or 5304296-13	15	13	5336144-15 or 5304296-15	20 or 21	18 or 19	300
020056	Wallstand CAN	5336144-16 or 5304296-16	15	12	5336144-20 or 5304296-20	20	17	300
020057	Wallstand Ion Chamber	5336144-17 or 5304296-17	15	12	5336144-21 or 5304296-21	20	17	300
020058	Wallstand Power 120VAC	5336144-18 or 5304296-18	15	11.25	5336144-22 or 5304296-22	20	16.25	600
020059	Wallstand Ground	5336144-19 or 5304296-19	15	12	5336144-23 or 5304296-23	20	17	600

Table 5-10: 3 - System Cabinet to OTS with 2-meter Bridge; Cable Lengths (in meters)

MIS #	Description	Short Cables (Standard)			Long Cables (Optional)			Voltage Rating
		Part #	Total Length	Usable Length	Part #	Total Length	Usable Length	
020012	OTS CAN	5139257	15	13.5	N/A	N/A	N/A	300
020013	OTS Tube 1 Stator / Fan & Pressure Switch (2 cables in bundled)	5139257- 2	15	13.5	N/A	N/A	N/A	600/300
020014	OTS Power	5139257-3	15	13.5	N/A	N/A	N/A	600
020015	OTS Tube 1 Cathode	5139257-4	15	13.5	N/A	N/A	N/A	75kV
020016	OTS Tube 1 Anode	5139257-5	15	13.5	N/A	N/A	N/A	75kV
020017	OTS Ground	5139257-6	15	14	N/A	N/A	N/A	600

Table 5-11: 3 - System Cabinet to OTS with 3 or 4-meter Bridge; Cable Lengths (in meters)

MIS #	Description	Short Cables (Standard)			Long Cables (Optional)			Voltage Rating
		Part #	Total Length	Usable Length	Part #	Total Length	Usable Length	
020012	OTS CAN	5139257-7	20	18.5	N/A	N/A	N/A	300
020013	OTS Tube 1 Stator / Fan & Pressure Switch (2 cables in bundled)	5139257-8	20	18.5	N/A	N/A	N/A	600/300
020014	OTS Power	5139257-9	20	18.5	N/A	N/A	N/A	600
020015	OTS Tube 1 Cathode	5139257-10	20	18.5	N/A	N/A	N/A	75kV
020016	OTS Tube 1 Anode	5139257-11	20	18.5	N/A	N/A	N/A	75kV
020017	OTS Ground	5139257-12	20	19	N/A	N/A	N/A	600

Table 5-12: 4 - System Cabinet to Console Wall Box; Cable Lengths (in meters)

MIS #	Description	Short Cables (Standard)			Long Cables (Optional)			Voltage Rating
		Part #	Total Length	Usable Length	Part #	Total Length	Usable Length	
11760A	Generator (Jedi) CAN	5336446-16 or 2407432-17	20	18	N/A	N/A	N/A	300
11761A	System CAN Open	5336446-17 or 2407432-18	20	18	N/A	N/A	N/A	300
11763A	Control Room Power	5336446-19 or 2407432-20	20	18	N/A	N/A	N/A	600
11764A	Ground	5336446-20 or 2407432-21	20	18	N/A	N/A	N/A	600
020064	RCIM2	5336144-24 or 5304296-24	20	18	N/A	N/A	N/A	600
020008	Table Conditioner Serial A	5336447-7 or 5139187-8	20	19	N/A	N/A	N/A	300

020009	DSA Condi-tioner Serial B	5336447-8 or 5139187-9	20	19	N/A	N/A	N/A	300

Table 5-13: 4A - System Cabinet to System Computer (via Wall Box); Cable Lengths (in meters)

MIS #	Description	Short Cables (Standard)			Long Cables (Optional)			Voltage Rating
		Part #	Total Length	Usable Length	Part #	Total Length	Usable Length	
11776A	Ground	5336446-41 or 2407432-42	23	19	N/A	N/A	N/A	N/A

Table 5-14: 5 - Wall Box to System Computer or Control Components; Cable Lengths (in meters)

MIS #	Description	Short Cables (Standard)			Long Cables (Optional)			Voltage Rating
		Part #	Total Length	Usable Length	Part #	Total Length	Usable Length	
11590A	External Ethernet (customer supplied)	N/A	N/A	N/A	N/A	N/A	N/A	N/A
11767A	Generator (Jedi) CAN	5336446-23 or 2407432-24	3	3	N/A	N/A	N/A	300
11768A	System CAN Open	5336446-24 or 2407432-25	3	3	N/A	N/A	N/A	300
11770A	120VAC from PDU	5336446-26 or 2407432-27	3	3	N/A	N/A	N/A	300
11774A	120VAC for right monitor	5336446-38 or 2407432-39	3	3	N/A	N/A	N/A	300
11775A	120VAC for left monitor	5336446-39 or 2407432-40	3	3	N/A	N/A	N/A	300
020010	Table Conditioner Serial	5336447-9 or 5139187-10	3	3	N/A	N/A	N/A	300
020011	DSA Conditioner Serial	5336447-10 or 5139187-11	3	3	N/A	N/A	N/A	300
020065	RCIM2	5336144-25 or 5304296-25	3	3	N/A	N/A	N/A	300

Table 5-15: 6 - System Computer to Wall Stand (via Wall Box and System Cabinet); Cable Lengths (in meters)

MIS #	Description	Short Cables (Standard)			Long Cables (Optional)			Voltage Rating
		Part #	Total Length	Usable Length	Part #	Total Length	Usable Length	
020069	Ethernet - Wall Stand Detector	5336144-30 or 5304296-30	45	42	N/A	N/A	N/A	125

Table 5-16: 6A - System Computer to Table (via Wall Box and System Cabinet); Cable Lengths (in meters)

MIS #	Description	Short Cables (Standard)			Long Cables (Optional)			Voltage Rating
		Part #	Total Length	Usable Length	Part #	Total Length	Usable Length	
020067	Ethernet - Table Detector	5336144-28 or 5304296-28	45	42	N/A	N/A	N/A	125
020068	Ethernet - Third Port	5336144-29 or 5304296-29	45	43.5	N/A	N/A	N/A	125

Table 5-17: 7 - Wall Stand to DSA; Cable Lengths (in meters)

MIS #	Description	Short Cables (Standard)			Long Cables (Optional)			Voltage Rating
		Part #	Total Length	Usable Length	Part #	Total Length	Usable Length	
020071	Power Supply CAN	5313845	3	1	N/A	N/A	N/A	300
020042	Detector Power (DC)	5304424	2.5	1	N/A	N/A	N/A	300
020043	Gnd	5304921	1.5	1	N/A	N/A	N/A	600

4.2.2 Cable Terminations (End A)

Table 5-18: 1 - System Cabinet to Table; Cable Terminations - End A - System Cabinet (Orange)

MIS #	Cable End A Connector Type	Cable End A Termination	Connector Dimensions				Cable Dimensions		
			Width (mm)	Width (in)	Height (mm)	Height (in)	Dia. (mm)	Dia. (in)	Area (sq. in)
020044	9 Pin Sub-D (M)	A25 J106	34.04	1.34	16.06	0.63	9.75	0.38	0.113
020045	15 Pin Sub-D (F)	A25 J81	33.71	1.32	16.08	0.63	7.76	0.3	0.971
020046	3 Pin Mate 'n Lok	A25 J4	28.42	1.11	14.79	0.58	8.14	0.32	0.08
020047	9 Pin Sub-D (M)	A25 J103	33.53	1.32	16.3	0.64	7.55	0.3	0.071
020049	6 Pin Mate 'n Lok	A25 J5	27.94	1.1	22.86	0.9	7.62	0.3	0.071
020050	1/4” Ring Terminal	GND Stud	12.7	0.5	7.11	0.28	12.7	0.5	0.785

Table 5-19: 1A System Cabinet to Wall Stand; Cable Terminations - End A - System Cabinet (Orange)

MIS #	Cable End A Connector Type	Cable End A Termination	Connector Dimensions				Cable Dimensions		
			Width (mm)	Width (in)	Height (mm)	Height (in)	Dia. (mm)	Dia. (in)	Area (sq. in)
11760A	9 Pin Sub-D (M)	A25 J108	33.27	1.31	16.51	0.65	10.16	0.4	0.125
11761A	9 Pin Sub-D (M)	A25 J107	33.27	1.31	16.51	0.65	10.16	0.4	0.125
11763A	3 Pin Mate 'n Lok	A25 J6	29.46	1.16	14.73	0.58	8.89	0.35	0.096
11764A	1/4” Ring Terminal	GND Stud	12.7	0.5	7.11	0.28	6.35	0.25	0.049
020064	50 Pin Sub-D (M)	A25 J109	58.42	2.3	20.57	0.81	8.89	0.35	0.096

Table 5-20: 2A - System Cabinet to Wall Stand; Cable Terminations - End A - System Cabinet (Orange)

MIS #	Cable End A Connector Type	Cable End A Termination	Connector Dimensions				Cable Dimensions		
			Width (mm)	Width (in)	Height (mm)	Height (in)	Dia. (mm)	Dia. (in)	Area (sq. in)
020056	9 Pin Sub-D (M)	A25 J206	34.04	1.34	16.06	0.63	9.75	0.38	0.113
020057	15 Pin Sub-D (M)	A25 J14	42.20	1.66	15.93	0.627	7.92	0.31	0.075
020058	3 Pin Mate 'n Lok	A25 J1	28.61	1.12	14.79	0.58	8.06	0.31	0.075
020052	3 Pin Mate 'n Lok	A25 J2	28.61	1.12	14.79	0.58	8.06	0.31	0.075
020053	9 Pin Sub-D (M)	A25 J203	33.53	1.32	16.3	0.64	7.55	0.29	0.066
020059	1/4" Ring Terminal	GND Stud	12.7	0.5	7.11	0.28	12.7	0.5	0.785

Table 5-21: 3 - System Cabinet to OTS; Cable Terminations - End A - System Cabinet (Orange)

MIS #	Cable End A Connector Type	Cable End A Termination	Connector Dimensions				Cable Dimensions		
			Width (mm)	Width (in)	Height (mm)	Height (in)	Dia. (mm)	Dia. (in)	Area (sq. in)
020012	9 Pin Sub-D (M)	A25 J41	34.04	1.34	16.06	0.58	9.75	0.38	0.113
020014	3 Pin Mate 'n Lok	A25 J5	29	1.14	28	1.1	8	0.32	0.08
020013	12 Pin Mate 'n Lok	A25 J42	36	1.42	27	1.06	20	0.79	0.49
020015	HV “Candle Stick”	A9	50	1.97	140	5.51	16	0.63	0.31
020016	HV “Candle Stick”	A9	50	1.97	140	5.51	16	0.63	0.31
020017	1/4” Ring Terminal	GND Stud	12.7	0.5	7.11	0.28	12.7	0.5	0.785

Table 5-22: 4A - System Cabinet to System Computer (via Wall Box); Cable Terminations - End A - System Cabinet (Orange)

MIS #	Cable End A Connector Type	Cable End A Termination	Connector Dimensions				Cable Dimensions		
			Width (mm)	Width (in)	Height (mm)	Height (in)	Dia. (mm)	Dia. (in)	Area (sq. in)
020009	9 Pin Sub-D (M)	Serial B	32.51	1.28	16	0.63	8.89	0.35	0.096
020008	9 Pin Sub-D (F)	Serial A	32.51	1.28	16	0.63	8.89	0.35	0.096
11776A	1/4” Ring Terminal	SKL GND	12.7	0.5	7.11	0.28	6.35	0.25	0.049

Table 5-23: 5 - Wall Box to System Computer or Control Components ; Cable Terminations - End A - Hospital Network

MIS #	Cable End A Connector Type	Cable End A Termination	Connector Dimensions				Cable Dimensions		
			Width (mm)	Width (in)	Height (mm)	Height (in)	Dia. (mm)	Dia. (in)	Area (sq. in)
11590A	RJ 45		11.68	0.46	8.04	0.32	5.63	0.22	0.038
11767A	9 Pin Sub-D (M)	Generator (Jedi) CAN	33.46	1.32	16.87	0.66	10.26	0.4	0.125
11768A	9 Pin Sub-D (M)	WB1 CAN	33.84	1.33	17.02	0.67	10.2	0.4	0.125
020065	26 Pin Sub-D (M)	WB1RCIM	41	1.61	52	2.05	8.89	0.35	0.096
11770A	NEMA 5-15 P	WB1Power	25.23	1	19.02	0.75	8.89	0.35	0.096
020010	9 Pin Sub-D (F)	WB1 TBL Conditioner Serial A	32.51	1.28	16	0.63	8.89	0.35	0.096
020011	9 Pin Sub-D (M)	WB1 Serial B	32.51	1.28	16	0.63	8.89	0.35	0.096

Table 5-24: 6 - System Computer to Wall Stand (via Wall Box and System Cabinet); Cable Terminations - End A - System Computer (Magic) (Yellow)

MIS #	Cable End A Connector Type	Cable End A Termination	Connector Dimensions				Cable Dimensions		
			Width (mm)	Width (in)	Height (mm)	Height (in)	Dia. (mm)	Dia. (in)	Area (sq. in)
020069	RJ 45	J4	11.68	0.46	8.04	0.32	5.63	0.22	0.038

Table 5-25: 6A - System Computer to Table (via Wall Box and System Cabinet); Cable Terminations - End A - System Computer (Magic) (Yellow)

MIS #	Cable End A Connector Type	Cable End A Termination	Connector Dimensions				Cable Dimensions		
			Width (mm)	Width (in)	Height (mm)	Height (in)	Dia. (mm)	Dia. (in)	Area (sq. in)
020067	RJ 45	J5	11.68	0.46	8.04	0.32	5.63	0.22	0.038
020068	RJ 45	J6	11.68	0.46	8.04	0.32	5.63	0.22	0.038

Table 5-26: 7 - Wall Stand to DSA; Cable Terminations - End A - Wall Stand (Blue)

MIS #	Cable End A Connector Type	Cable End A Termination	Connector Dimensions				Cable Dimensions		
			Width (mm)	Width (in)	Height (mm)	Height (in)	Dia. (mm)	Dia. (in)	Area (sq. in)
020042	IEC 320	A6 J4	21	0.827	28.7	1.13	8.38	0.33	0.086
020043	1/4” Ring Terminal	A7 - GND Stud	1	0.042	27.38	1.078	5.41	0.213	0.0357
020071	Serial 9 Pin Sub-D Male	A6 J3	12.55	0.494	30.81	1.213	8	.32	0.08

4.2.3 Cable Terminations (End B)

Table 5-27: 1 - System Cabinet to Table; Cable Terminations - End B - Table (Brown)

MIS #	Cable End B Connector Type	Cable End B Termination	Connector Dimensions				Cable Dimensions		
			Width (mm)	Width (in)	Height (mm)	Height (in)	Dia. (mm)	Dia. (in)	Area (sq. in)
020044	9 Pin Sub-D (F)	A0 J5	33.97	1.34	16.18	0.64	9.66	0.38	0.113
020045	15 Pin Sub-D (F)	A0 J4	42.20	1.66	15.93	0.63	7.77	0.31	0.075
020046	IEC 320 (F0)	A0 J2	28.88	1.31	20.84	0.82	8.8	0.35	0.096
020047	9 Pin Sub-D (M)	A0 J3	33.29	1.31	16.27	0.64	7.77	0.31	0.075
020048	9 Pin Sub-D (F)	A0 J6	33.16	1.3	16.19	0.68	8.09	0.32	0.08
020049	6 Pin (Matrix) Mate 'n Lok	A0 J1	3@10.08	3@0.4	3@4.94	3@0.2	8.92	0.35	0.096
020050	1/4” Ring Terminal	A0	12.7	0.5	7.11	0.28	6.35	0.25	0.049

Table 5-28: 2 - System Cabinet to Wall Stand; Cable Terminations - End B - Wall Stand (Blue)

MIS #	Cable End B Connector Type	Cable End B Termination	Connector Dimensions				Cable Dimensions		
			Width (mm)	Width (in)	Height (mm)	Height (in)	Dia. (mm)	Dia. (in)	Area (sq. in)
020052	IEC 320	A1 J5	29.05	1.14	21.07	0.83	8.32	0.37	0.108
020053	9 Pin Sub-D (M)	A6 J2	33.28	1.31	16.6	0.65	7.77	0.31	0.075
020056	9 Pin Sub-D (F)	A1 J2	33.28	1.31	16.6	0.65	9.15	0.36	0.102
020057	9 Pin Sub-D (F)	A1 J1	33.68	1.32	16.69	0.65	7.58	0.29	0.066
020058	IEC 320	A1 J4	29.05	1.14	20.98	0.83	8	0.31	0.075
020059	1/4” Ring Terminal	A7	12.7	0.5	7.11	0.28	6.35	0.25	0.049

Table 5-29: 3 - System Cabinet to OTS; Cable Terminations - End B - OTS (No Color)

MIS #	Cable End B Connector Type	Cable End B Termination	Connector Dimensions				Cable Dimensions		
			Width (mm)	Width (in)	Height (mm)	Height (in)	Dia. (mm)	Dia. (in)	Area (sq. in)
020012	9 Pin Sub-D (F)	OTS B1 J3	33.49	1.31	16.65	0.65	8.99	0.35	0.096
020014	3 Pin Mate 'n Lok	A7 J5	28.19	1.11	14.73	0.58	8.14	0.32	0.08
020013	Spade & Ring Connectors (2 cables bun-dled together)	A12	11	0.44	30	1.18	14.05/ 6.37	0.81	0.515
020015	HV Candle Stick	A12	62.79	2.47	62.79	2.47	16.82	0.67	0.353
020016	HV Candle Stick	A12	62.79	2.47	62.79	2.47	16.82	0.67	0.353
020017	#10 Ring Ter-minal	A1	10.41	0.41	7.11	0.28	6.51	0.25	0.049

Table 5-30: 4 - System Cabinet to Console Wall Box; Cable Terminations - End B - Wallbox (No Color)

MIS #	Cable End B Connector Type	Cable End B Termination	Connector Dimensions				Cable Dimensions		
			Width (mm)	Width (in)	Height (mm)	Height (in)	Dia. (mm)	Dia. (in)	Area (sq. in)
11760A	9 Pin Sub-D (F)	Generator (Je-di) CAN	33.49	1.31	16.65	0.65	8.99	0.35	0.096
11761A	9 Pin Sub-D (F)	WB1 CAN	33.97	1.33	16.18	0.64	9.66	0.38	0.113
11763A	Receptacle	WB1 Power	3@10.08	3@0.4	3@4.94	3@0.2	8.92	0.35	0.096
11764A	#10 Ring Ter-minal	GND	10.41	0.41	7.11	0.28	6.35	0.25	0.049
020064	26 Pin Sub-D (F)	RCIM	42.16	1.65	16.17	0.6366	8.49	0.33	0.086

Table 5-31: 4A - System Cabinet to System Computer (via Wall Box); Cable Terminations - End B - System Computer (Yellow)

MIS #	Cable End B Connector Type	Cable End B Termination	Connector Dimensions				Cable Dimensions		
			Width (mm)	Width (in)	Height (mm)	Height (in)	Dia. (mm)	Dia. (in)	Area (sq. in)
020009	9 Pin Sub-D (F)	WB1	32.51	1.28	16	0.63	8.89	0.35	0.096
020008	9 Pin Sub-D (M)	WB1 Serial A	32.51	1.28	16	0.63	8.89	0.35	0.096
11776A	#10 Ring Terminal	System Computer Ground Stud	10.4	0.41	7.11	0.28	7.37	0.25	.049

Table 5-32: 5 - Wall Box to System Computer or Control Component; Cable Terminations - End B - System Computer (Yellow)

MIS #	Cable End B Connector Type	Cable End B Termination	Connector Dimensions				Cable Dimensions		
			Width (mm)	Width (in)	Height (mm)	Height (in)	Dia. (mm)	Dia. (in)	Area (sq. in)
11590A	RJ 45	Hospital Network	11.68	0.46	8.04	0.32	5.63	0.22	0.038
11767A	9 Pin Sub-D (F)	System Computer J2	32.51	1.28	16	0.63	8.89	0.35	0.096
11768A	9 Pin Sub-D (F)	System Computer J1	32.51	1.28	16	0.63	8.89	0.35	0.096
11770A	IEC 320	System Computer Power	25.4	1	16.51	0.65	8.89	0.35	0.096
020010	Pin Sub-D (F)	System Serial A	32.51	1.28	16	0.63	8.89	0.35	0.096
020011	Pin Sub-D (F)	System Serial B	32.51	1.28	16	0.63	8.89	0.35	0.096
020065	26 Pin Sub-D (F)	RCIM	50.8	2	10.16	0.4	8.89	0.35	0.096

Table 5-33: 6 - System Computer to Wall Stand (via Wall Box and System Cabinet); Cable Terminations - End B - Wall Stand (Blue)

MIS #	Cable End B Connector Type	Cable End B Termination	Connector Dimensions				Cable Dimensions		
			Width (mm)	Width (in)	Height (mm)	Height (in)	Dia. (mm)	Dia. (in)	Area (sq. in)
020069	RJ 45	A6 J1	11.68	0.46	8.04	0.32	5.63	0.22	0.038

Table 5-34: 6A - System Computer to Table (via Wall Box and System Cabinet); Cable Terminations - End B - Table (Brown)

MIS #	Cable End B Connector Type	Cable End B Termination	Connector Dimensions				Cable Dimensions		
			Width (mm)	Width (in)	Height (mm)	Height (in)	Dia. (mm)	Dia. (in)	Area (sq. in)
020068	RJ 45	A0 J8	11.68	0.46	8.04	0.32	5.63	0.22	0.038
020067	RJ 45	A0 J7	11.68	0.46	8.04	0.32	5.63	0.22	0.038

Table 5-35: 7 - Wallstand to DSA; Cable Terminations - End B - DSA (No Color)

MIS #	Cable End B Connector Type	Cable End B Termination	Connector Dimensions				Cable Dimensions		
			Width (mm)	Width (in)	Height (mm)	Height (in)	Dia. (mm)	Dia. (in)	Area (sq. in)
020071	Serial 9 Pin Sub-D (M)	A2 J1	32	1.26	52	2.05	8	0.32	0.08
020042	IEC 320	A1 J10	28	1.1	86	3.39	8	0.32	0.08
020043	#10 Ring Terminal	J5 - GND stud	1	0.039	27.38	1.078	5.41	0.213	0.0357

4.2.4 Cable Ratings

Table 5-36: Cable Ratings

MIS #	Part #	Description	UL TYPE	UL Style	Flammability Rating	Voltage Rating	Actual Voltage
MIS020044	5336144 or 5304296	CAN OPEN	AWM	2919	VW-1	300V	<30V
MIS020045	5336144-1 or 5304296-1	TABLE ION CHAMBER	CL3	-	FT4	300V	<30V
MIS020046	5336144-2 or 5304296-2	120VAC	TC	1277	IEEE 1202	600V	120V
MIS020047	5336144-3 or 5304296-3	CONDITIONER CONTROL RS232	CL3	-	FT4	300V	<30V
MIS020048	5336144-4 or 5304296-4	EMERGENCY STOP RT LINE	CL3	-	FT4	300V	<30V
MIS020049	5336144-5 or 5304296-5	TABLE POWER 220VAC	TC	1277	IEEE 1202	600V	220V

MIS #	Part #	Description	UL TYPE	UL Style	Flammability Rating	Voltage Rating	Actual Voltage
MIS020050	5336144-6 or 5304296-6	GROUND	MTW or BC-5W2	1063	FT1	600V	0V
MIS020067	5336144-28 or 5304296-28	ETHERNET CABLE	CMP	94V.0	LSZH	-	<30V
MIS020068	5336144-29 or 5304296-29	THIRD PORT ETHERNET CABLE	CMP	94V.0	LSZH	-	<30V
MIS020056	5336144-16 or 5304296-16	CAN OPEN	AWM	2919	VW-1	300V	<30V
MIS020057	5336144-17 or 5304296-17	WS ION CHAMBER	CL3	-	FT4	300V	<30V
MIS020058	5336144-18 or 5304296-18	WS POWER 120VAC	TC	1277	IEEE 1202	600V	120V
MIS020059	5336144-19 or 5304296-19	GROUND	MTW or BC-5W2	1063	FT1	600V	0V
MIS020069	5336144-30 or 5304296-30	ETHERNET CABLE	CMP	94V.0	LSZH	-	<30V
MIS020052	5336144-12 or 5304296-12	CONDITIONER 120VAC	TC	1277	IEEE 1202	600V	120V
MIS020053	5336144-13 or 5304296-13	CONDITIONER CONTROL RS232	CL3	-	FT4	300V	<30V
MIS11760A	5336446-16 or 2407432-17	JEDI CAN	AWM	2919	VW-1	300V	<30V
MIS11761A	5336446-17 or 2407432-18	SYSTEM CAN OPEN	AWM	2919	VW-1	300V	<30V
MIS020064	5336144-24 or 5304296-24	USER I/O	AWM	2464	FT1	300V	<30V
MIS11763A	5336446-19 or 2407432-20	CONTROL ROOM POWER	TC	1277	IEEE 1202	600V	120V
MIS11764A	5336446-20 or 2407432-21	GROUND	MTW or BC-5W2	1063	FT1	600V	0V
MIS020008	5336447-7 or 5139187-8	SERIAL A	CL3	-	FT-4	300V	<30V
MIS020009	5336447-8 or 5139187-9	SERIAL B	CL3	-	FT-4	300V	<30V

MIS #	Part #	Description	UL TYPE	UL Style	Flammability Rating	Voltage Rating	Actual Voltage
MIS11776A	5336446-41 or 2407432-42	GROUND	MTW or BC-5W2	1063	FT1	600V	<30V
MIS11767A	5336446-23 or 2407432-24	JEDI CAN	AWM	2919	VW-1	300V	<30V
MIS11768A	5336446-24 or 2407432-25	SYSTEM CAN OPEN	AWM	2919	VW-1	300V	<30V
MIS020065	5336144-25 or 5304296-25	RCIM	AWM	2464	FT1	300V	<30V
MIS11770A	5336446-26 or 2407432-27	120VAC FROM PDU	SJTW	-	VW-1	300V	120VAC
MIS11774A	5336446-38 or 2407432-39	MONITOR 1 POWER	SJTW	-	VW-1	300V	120VAC
MIS11775A	5336446-39 or 2407432-40	MONITOR 2 POWER	SJTW	-	VW-1	300V	120VAC
MIS020010	5336447-9 or 5139187-10	SERIAL A	CL3	-	FT4	300V	30V
MIS020011	5336447-10 or 5139187-11	SERIAL B	CL3	-	FT-4	300V	30V
MIS020071	5313845	DSA Conditioner to Wallstand Status Line	CL3	-	FT4	300V	<30V
MIS020042	5304424	WS-DSA DETECTOR POWER CABLE	SJT	62	FT2	300V	120V
MIS020043	5304921	DSA Ground Cable	MTW or BC-5W2	1028	FT1	600V	0V
MIS020013	5139257-2	Stator Fan & pressure switch	758	2463	VW-1	600V	350V
MIS020014	5139257-3	OTS PWR	TC	1277	IEEE 1202	600V	120V
MIS020015	5139257-4	HV Transformer Anode	-	94V.A	-	75KV	upto 75KV
MIS020016	5139257-5	HV Transformer Cathode	-	94V.A	-	75KV	75KV
MIS020017	5139257-6	GND	MTW or BC-5W2	1063	FT1	600V	0V

MIS #	Part #	Description	UL TYPE	UL Style	Flamma-bility Rat-ing	Voltage Rating	Actual Voltage
MIS020012	5139257-7	OTS CAN	AWM	2919	VW1	300V	<30V

5 Light Specification

The monitor screen is adjusted for an optimum ambient light level of 50 lux.

6 Dimensioned Figures and Drawings

6.1 Wall Box

NOTE: The use of a wall box is required with this system. Wall box is used to interface the cables in exam room and patient room. The cables used with this system are terminated with connectors that can only be used with this specific wall box.

The wall plate will fit best over a 266.7 x 266.7 mm (10.5 x 10.5 in) x 4" wall box (installed by electrical contractor).

Illustration 5-3: Wall Plate Dimensions 266.7 x 266.7 mm (10.5 x 10.5 in)

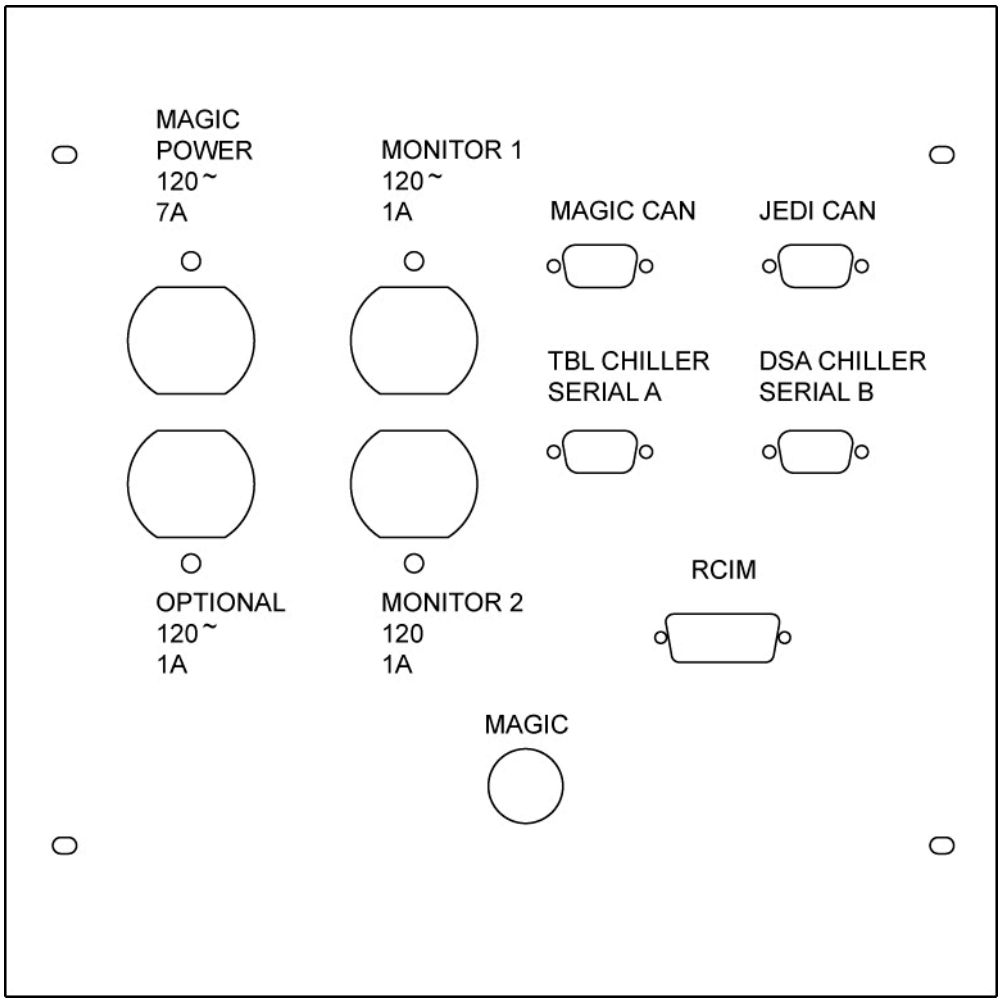

6.2 System Equipment Cable Entrance

Illustration 5-4: Table Cable Entrances

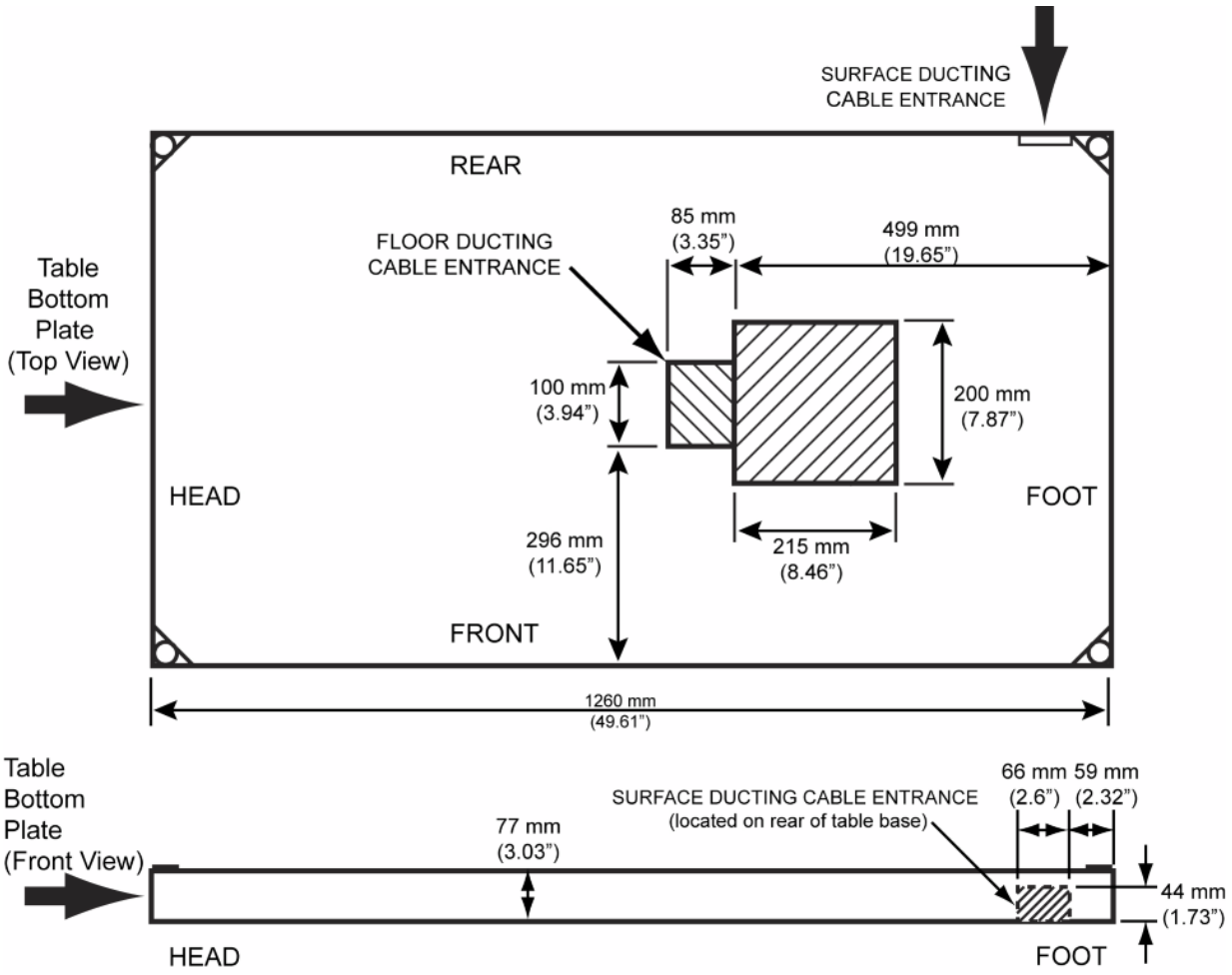

Illustration 5-5: System Cabinet Cable Entrances

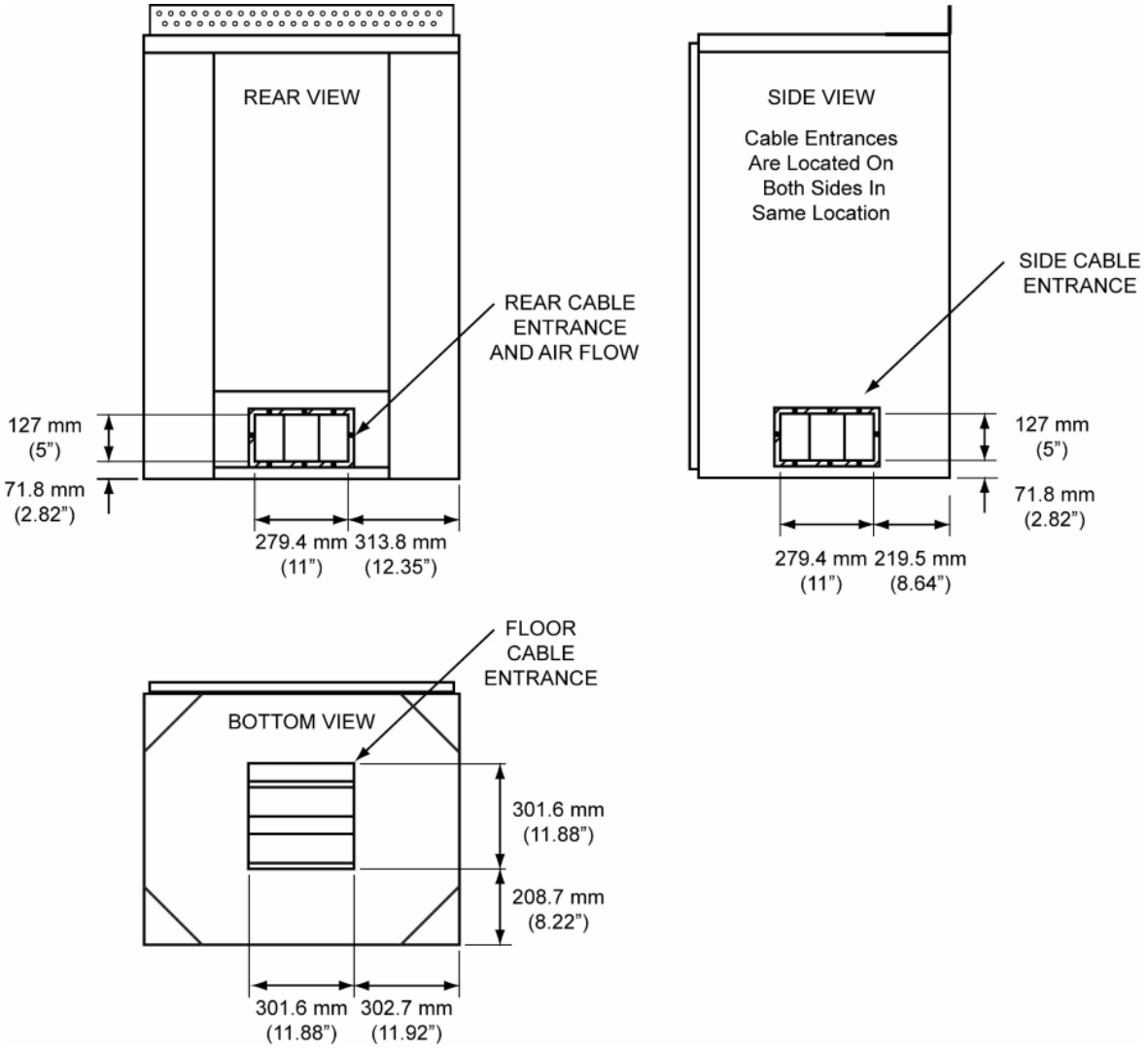

Illustration 5-6: Wall Stand Cable Entrance

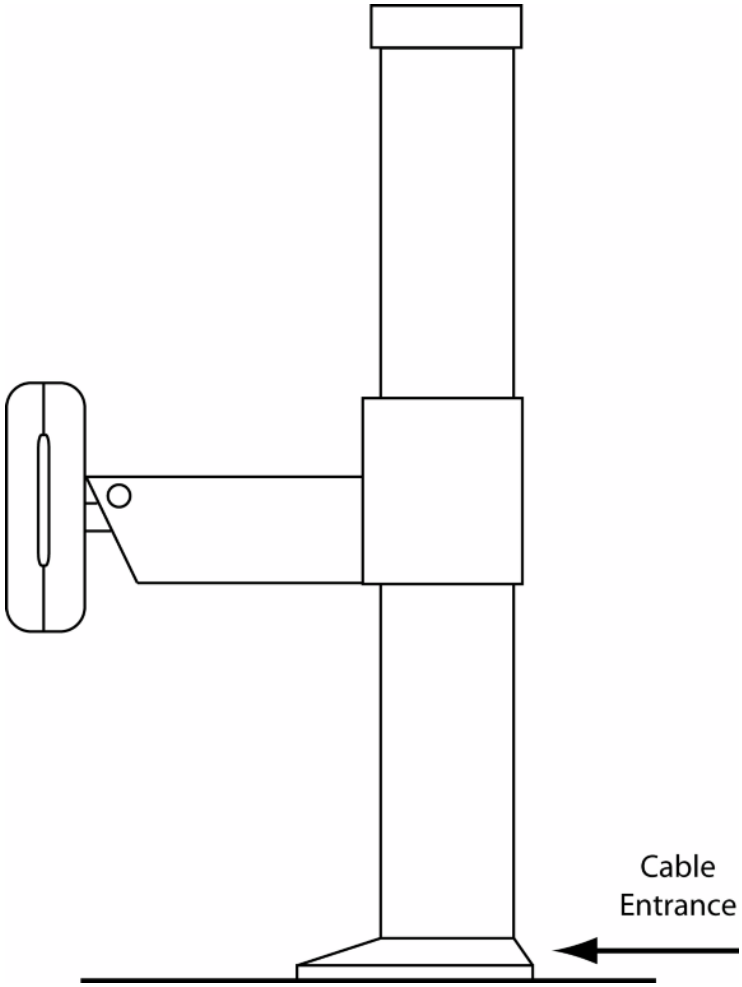

Chapter 6 Communications/Networking

1 Hospital Network

1.1 Broadband Network Connection

The system is equipped with Broadband fast Ethernet hardware for Service diagnostics. Systems equipped with Digital Imaging are capable of placing electronic images on the Hospital image Ethernet Network. It is the purchasers responsibility to provide the Ethernet connection (rated at 100Mb/sec transfer rate for optimal performance) within 3 feet (0.91 meters) of the Operator Console.

The network connection is made at the Operator Console.

- 100BaseT network connection is preferred
- 10BaseT network connection is acceptable

NOTE: If using GE PACS LITE BOX software, the GE PACS LITE BOX software revision must be 6.1d02 or greater. Older versions will not work with the system.

1.2 Phone Line(s) - Voice

It is recommended that phone line(s) be installed within 3 feet (0.91 meters) of the Operator Console and be operational prior to installation.

1.3 Remote Services Broadband Pre-Installation Requirements for Europe

- To enable an easier installation and to benefit from remote support (service and engineering teams), equipments should be Insite connected at installation.
- Thus the connectivity solution to implement should be decided during pre installation and all related data should be available before installation starts.
- For all installations make sure that you have at least one RJ45 dedicated to connect the new equipment on the LAN. In case of Broadband, this connection will also be used for the remote service of the equipment.
- GE Healthcare offers a wide range of connectivity solutions: From full GE package (GE supplies Router and customer buys the line) to customized solutions (GE adapts to customer infrastructure).
- Network devices (like CISCO Routers for instance) can be shipped with the equipment only if the Sales Representative has added the connectivity item in the order.
- For complete descriptions of these connectivity solutions, please refer to the Broadband Solutions catalogue available through your local GEHC sales and service representative.
- Connectivity Process and pre-installations checklists are available in the Broadband Connectivity Pre-Installation Manual (PIM) available through your local GE Healthcare sales and service representative.

- For each solution selected by the customer the pre-installation checklist must be fulfilled by site IT manager in order to get connectivity information (site IT manager contacts, IP address...) available at installation.

2 Networkflow Audit

Understanding how your facility leverages its network investment through our Net*workflow* process will help us better integrate the Optima XR640 system into your operations. The following is intended to identify the various ways the system can fit into your workflow and the ramifications of selecting one path or another. We would like to start at the beginning, with the patient arriving at your facility, going through registration/admittance/patient scheduling and proceed all the way to the read images being archived.

2.1 What is the Networkflow Audit

This audit was designed to collect information on your network, your DICOM equipment, your workflow and your dataflow. Once this information is collected, it will be used to determine the best way the system can fit into your facility. The information will also be used to ease and speed the integration of the system into your facility .This audit is intended to be performed before the system is quoted to you. With all facts uncovered, GE can prepare a more accurate quote and minimize "surprises" at the time of install.

You should fill this out with the GE Healthcare representative. They will be able to answer any questions you may have.

2.2 Facility Information

Name of facility:	_____	Room #:	_____
Workflow contact:	_____	Phone:	_____
Network Infrastructure contact:	_____	Phone:	_____
DICOM Device contact:	_____	Phone:	_____
Other contact:	_____	Phone:	_____
GE Healthcare Sales Representative:	_____		_____
GE Healthcare Auditor:	_____		_____

2.3 Workflow Analysis

When the patient arrives in the system room for the exam, how is the patient data entered into the system?

☐ Manually typed

☐ Entered via barcode reader
Barcode format: _____

☐ Downloaded from HIS/RIS

If the patient information was downloaded from a HIS/RIS system, how would the query be structured? *(Pick all that apply)*

☐ By date

☐ By modality

☐ By patient information

☐ Other method - Please explain: _____

In retrieving patient schedule information, do you query

☐ Once at the start of the shift ☐ Several times during a shift ☐ Before each patient

What percent of images acquired are reviewed via softcopy? _____%

What percent of images acquired are printed? _____%

Once the digital diagnostic images are acquired, what is your facility's default workflow? *(Pick one)*

☐ Manually send ☐ Automatically push

(Pick all that apply)

☐ Review station(s) ☐ Archive system(s) ☐ Printer(s)

When images are configured for automatic push, what would you like to be sent to PACS/archive/ review stations?

☐ Raw ☐ Processed ☐ Raw and Processed

When images are printed, on what device is the print command originated? *(Pick all that apply)*

☐ The system ☐ A review workstation ☐ A PACS system

How soon after the images are acquired is the first image quality check done?

☐ Before the next image is shot ☐ Before the patient leaves ☐ After patient leaves

When it comes to image quality, would you prefer to;

☐ Consider all images good unless marked bad

☐ Consider all images bad unless marked good

2.4 The Physical Network

Physical infrastructures vary widely from institution to institution. GE Healthcare tried to pick the most popular networking connection to ease integration into your facility's network.

In the system room, this facility;

☐ Has 100baseT installed ☐ Has 10baseT installed ☐ Has a different network installed

☐ Will have 100baseT installed ☐ Will have 10baseT installed ☐ We don't have a network installed

Do you segment your network using subnets?

☐ Yes ☐ No

Our equipment's IP addresses are:

☐ Static ☐ Acquired via DHCP ☐ A combination of both methods

2.5 System Parameters

The Optima XR640 system uses the following IP Addresses internally:

- 192.168.1.50
- 192.168.2.45
- 192.168.3.50

If the hospital network uses 192.168.x.x, there will be a conflict. If this conflict occurs, you must contact your GE Service Representative to change the internal IP Addresses used by the system.

Optima XR640 System

Host Name: _____

Network (IP) Address: _ _ _ . _ _ _ . _ _ _ . _ _ _

Subnet Mask: _ _ _ . _ _ _ . _ _ _ . _ _ _

Router IP: _ _ _ . _ _ _ . _ _ _ . _ _ _

Scheduled Station AE Title: _____

The **Host Name** is the network's name for the Optima XR640 system.
IP addresses uniquely identify a device on a network. IP addresses are constructed of 32 bits, usually displayed as four numbers separated by a period. Please indicate the **Network (IP) Address** that will be assigned to the system.

Subnets are a method of logically dividing a network into smaller blocks. This is usually done based upon locality, functionality or security requirements. If your facility will place the system on a subnet, please list the **Subnet Mask** and **Router IP**.
The **Scheduled Station AE (Application Entity) Title** is the name your HIS/RIS system will use to send worklist information to the Optima XR640 system.

Table 6-1: Remote Host Data

Remote Hosts	Include a DICOM Compliance Statement for each device			
This remote Host is a:	☐ Review Work Station ☐ Archival Device ☐ PACS System ☐ MPPS Server	☐ Review Work Station ☐ Archival Device ☐ PACS System ☐ MPPS Server	☐ Review Work Station ☐ Archival Device ☐ PACS System ☐ MPPS Server	**Information on Optima XR640** The system allows you to configure only 1 HIS/RIS server. The system allows you to configure only 1 MPPS server. The system allows configuration of multiple printers and multiple PACS/archive/review stations. The Host Name of all the nodes configured on the system should be unique within the system.
Manufacturer/Model:				

Remote Hosts	Include a DICOM Compliance Statement for each device		
Software/Firmware version:			
Network (IP) Address:	___ . ___ . ___ . ___	___ . ___ . ___ . ___	___ . ___ . ___ . ___
DICOM Compliance Level:	☐ 1.0 ☐ 2.0 ☐ 3.0 ☐ Not DICOM Compliant	☐ 1.0 ☐ 2.0 ☐ 3.0 ☐ Not DICOM Compliant	☐ 1.0 ☐ 2.0 ☐ 3.0 ☐ Not DICOM Compliant
Image Types Supported:	☐ DX ☐ CR	☐ DX ☐ CR	☐ DX ☐ CR
Supports Multi-framing:	☐ Yes ☐ No	☐ Yes ☐ No	☐ Yes ☐ No
Host Name:			
Do you plan to use this device as a:			
Remote Host Server?	☐ Yes ☐ No If "yes" provide:	☐ Yes ☐ No If "yes" provide:	☐ Yes ☐ No If "yes" provide:
AE Title:			
Port Number:			
Query/Retrieve?	☐ Yes ☐ No If "yes" provide:	☐ Yes ☐ No If "yes" provide:	☐ Yes ☐ No If "yes" provide:
Query/Retrieve AE Title:			
Port Number:			
Query/Retrieve by:	☐ Study ☐ Patient	☐ Study ☐ Patient	☐ Study ☐ Patient
Storage Commitment?	☐ Yes ☐ No If "yes" provide:	☐ Yes ☐ No If "yes" provide:	☐ Yes ☐ No If "yes" provide:
Storage Commitment AE Title:			
Port Number:			
Network (IP) Address:	___ . ___ . ___ . ___	___ . ___ . ___ . ___	___ . ___ . ___ . ___

Remote Hosts	Include a DICOM Compliance Statement for each device				
MPPS Server?	☐ Yes ☐ No If "yes" provide:	☐ Yes ☐ No If "yes" provide:	☐ Yes ☐ No If "yes" provide:		
AE Title:					
Port Number:					
Network (IP) Address:	_ _ _ . _ _ _ . _ _ _ . _ _ _	_ _ _ . _ _ _ . _ _ _ . _ _ _	_ _ _ . _ _ _ . _ _ _ . _ _ _		

2.6 Devices & Services Audit

Use the following narrative to complete the form on the previous page.

REMOTE HOSTS: Remote hosts are DICOM devices to which the Optima XR640 system can push an image. Remote hosts can be review workstations, archival devices, or PACS systems. Please indicate the type of remote host. Now indicate the manufacturer and model name or number.

Compatibility can vary with software versions, please indicate the version of device firmware/software the device will be running.

List the device's **IP address**.

The answers to the next several items can be found in the device's DCS (DICOM Conformance Statement).

Please indicate the highest level of **DICOM conformance** for this device. If the device is not DICOM compliant, please indicate so and move on to the next device.

If the device does have some level of DICOM conformance please return a copy of the DICOM Conformance Statement with this completed form.

DICOM supports a number of **image types**. Please indicate if this device supports the DX and/or the CR image types.

The **host name** is the name that will appear on the screen and users will use to indicate this device. Please list the host name.

The next four sections address the four services that remote host devices may offer. Each of the services will have its own AE (application entity) title and port number. The AE title is the name given to a service or application provided by a DICOM device. The port number is a logical designation within the device. These pieces of information are available in the device's DCS.

Being a **remote host server** allows the Optima XR640 system to push images to other devices. If you want the device to accept this service, check yes and provide the AE title and port number.

Being a **query/retrieve** service class provider allows the Optima XR640 system to query this device and retrieve images stored there. If you want this device to provide these services to the Optima XR640 system check yes and fill in the requested items.

The **query/retrieve** by study or patient controls how much the user is able to retrieve at one time. For study, the user may retrieve studies, series, images. For patient, the user may retrieve all of the study attributes plus a patient's entire image collection.

A **storage commitment** provider confirms that images sent by the Optima XR640 system to an archival system were received and stored. Note - This option is only available when the Optima XR640 system is sending DX type images. If your device supports both DX image types and storage commitment check yes and provide the AE title, the port number and the network (IP) address.

The **MPPS server** receives the messages sent by the Optima XR640 system. These messages consist of information such as when the exam started and closed, how many images were acquired, dose information, etc. This information is then updated on the Hospital Scheduling system. If the site has an MPPS server, provide the AE Title, IP address and port number.

Printers	Include a DICOM Compliance Statement for each printer	
Manufacturer/Model:		
Software/Firmware Version:		
Prints via Spooler:	☐ Yes ☐ No	☐ Yes ☐ No
Network (IP) Address:	_ _ _ . _ _ _ . _ _ _ . _ _ _	_ _ _ . _ _ _ . _ _ _ . _ _ _
DICOM Compliance Level:	☐ 1.0 ☐ 2.0 ☐ 3.0 ☐ Not DICOM Compliant	☐ 1.0 ☐ 2.0 ☐ 3.0 ☐ Not DICOM Compliant
Host Name:		
Printer AE Title:		
Port Number:		

Printers: As with the remote hosts, please list the manufacturer and the model name/number. The software/firmware version should also be entered. Next, supply the IP address of the printer. Indicate the DICOM compliance level of the printer. If it is not DICOM compatible, please indicate so.

DICOM compatibility does not guarantee all functions will work properly. **Include every unique printer's DICOM Compliance Statement.**
Supply the Host name for the printer.
Look in the DCS for the printer's AE title and port number.

RIS Systems	Include a DICOM Compliance Statement for each device.	
Manufacturer/Model:		
Software/Firmware Version:		
Network (IP) Address:	_ _ _ . _ _ _ . _ _ _ . _ _ _	_ _ _ . _ _ _ . _ _ _ . _ _ _
DICOM Compliance Level:	❑ 1.0 ❑ 2.0 ❑ 3.0 ❑ Not DICOM Compliant	❑ 1.0 ❑ 2.0 ❑ 3.0 ❑ Not DICOM Compliant
Host Name:		
HIS/RIS AE Title:		
Port Number:		
Modality used for Scheduling:	❑ DX ❑ CR	❑ DX ❑ CR

RIS Systems: As with the remote hosts please list the manufacturer and the model name/number. The software/firmware version should also be entered.
Indicate the IP address the device is using as well as the DICOM compliance level. Please include the DCS for the RIS with this completed form.
Fill in the Host name.
Look in the DCS for the AE title and port number.
Please indicate if this device supports the DX and/or the CR image types. This information should also be in the device's DCS.

2.7 Data Flow Analysis

Now that we have outlined the way your facility works and the devices you work with, we would like to define how the images flow through your network.

The Optima XR640 system is an acquisition-only device. Because of that fact you will need to move acquired images off the system and into your work/data flow. Please use the chart below to describe your data flow. As an example, if your facility reviewed images as the first step after acquisition, the review box would be checked in the first column of the **Task** row (shaded) and the review workstation would be checked in the first column of the **Device** row. You should use each of the functions once.

1st step after acquisition	2nd step after acquisition	3rd step after acquisition
❑ Archive	❑ Archive	❑ Archive
❑ Print	❑ Print	❑ Print
❑ Review	❑ Review	❑ Review
❑ Archive device	❑ Archive device	❑ Archive device
❑ PACS	❑ PACS	❑ PACS
❑ Printer	❑ Printer	❑ Printer
❑ Review Workstation	❑ Review Workstation	❑ Review Workstation
❑ Spooler ⇒ Printer(s)	❑ Spooler ⇒ Printer(s)	❑ Spooler ⇒ Printer(s)

1st step after acquisition	2nd step after acquisition	3rd step after acquisition
❑ Spooler ⇒ Review Workstation(s)	❑ Spooler ⇒ Review Workstation(s)	❑ Spooler ⇒ Review Workstation(s)

Printing: It is important to us to understand the path your images follow before they are printed. We are now looking to answer the question of what road an image most typically travels on its way to be printed regardless if that is the first step in your process or not. Please try to find in the list below the path that best describes the path the image takes from acquisition to printing.

❑ XR System ⇒ Printer

❑ XR System ⇒ Spooler ⇒ Printer(s)

❑ XR System ⇒ Archive Device ⇒ Printer

❑ XR System ⇒ Archive Device ⇒ Spooler ⇒ Printer (s)

❑ XR System ⇒ Archive Device ⇒ Review Workstation ⇒ Printer

❑ XR System ⇒ Archive Device ⇒ Review Workstation ⇒ Spooler ⇒ Printer

❑ XR System ⇒ PACS ⇒ Printer

❑ XR System ⇒ PACS ⇒ Spooler ⇒ Printer

❑ XR System ⇒ Review Workstation ⇒ Printer

❑ XR System ⇒ Review Workstation ⇒ Spooler ⇒ Printer

❑ XR System ⇒ Other: _____ ⇒ Printer(s)

Image Review: Now let's trace the path from acquisition to image review. Again, pick the item below that best describes how the image flows from the Optima XR640 system to the radiologist.

❑ XR System ⇒ Printer ⇒ Printed Film ⇒ Radiologist

❑ XR System ⇒ Review Workstation ⇒ Radiologist

❑ XR System ⇒ Archive Device ⇒ Review Workstation ⇒ Radiologist

❑ XR System ⇒ PACS ⇒ Radiologist

❑ XR System ⇒ PACS ⇒ Review Workstation ⇒ Radiologist

❑ XR System ⇒ Other: _____ ⇒ Radiologist

Archive: The final part of this triad is archiving images. Pick the item below that best describes the flow of images to be archived.

- ❑ XR System ⇒ Archive Device
- ❑ XR System ⇒ PACS
- ❑ XR System ⇒ Printer ⇒ Printed Film ⇒ Filing System
- ❑ XR System ⇒ Review Workstation ⇒ Archive Device
- ❑ XR System ⇒ Review Workstation ⇒ PACS
- ❑ XR System ⇒ Other: _____ ⇒ Archive Device

2.8 What Will Happen Next?

Next, your completed audit sheet will be analyzed by your GE Healthcare representative and any issues identified.

This page left intentionally blank.

© 2008 General Electric Company.
GE Medical Systems, a General Electric Company, going to market as GE Healthcare.

www.gehealthcare.com